Fuji Electric
e-Front runners

STARTING GUIDE

FRENIC-Eco · FRN-F1

Frequency inverter for HVAC applications

3-phase 400V
0.75 – 560kW

Last update: 281020087
SG_Eco_EN_2.1.0

Version	Changes applied	Date	Written	Checked	Approved
2.0.0	Second edition	26/06/2007	D. Bedford		
2.1.0	ROM 1900 functions added Small corrections	28/10/2008	J.Rasmussen	D. Bedford	

CONTENTS

Preface

Thank you for purchasing our FRENIC-Eco series of inverters.

This product is designed to drive a three-phase induction motor for fan and pump applications.

Read through this starting guide and become familiar with proper handling and operation of this product. Please note that this starting guide should enable you to get familiar with the main functions and should help you to install the inverter. Not all functions are described here. For more detailed information please refer absolutely to the attached CD-ROM which contains the user's manual (MEH456).

Improper handling might result in incorrect operation, a short life, or even a failure of this product as well as the motor.
Have this manual delivered to the end user of this product. Keep this starting guide and CD-ROM in a safe place until this product is discarded.

Listed below are the other materials related to the use of the FRENIC-Eco. Read them in conjunction with this starting guide as necessary.

• FRENIC-Eco User's Manual	(MEH456)
• RS485 Communication User's Manual	(MEH448b)
• Catalogue	(MEH442c)
• RS485 Communications Card "OPC-F1-RS" Installation Manual	(INR-SI47-0872)
• Relay Output Card "OPC-F1-RY" Instruction Manual	(INR-SI47-0873)
• Mounting Adapter for External Cooling "PB-F1" Installation Manual	(INR-SI47-0880)
• Panel-mount Adapter "MA-F1" Installation Manual	(INR-SI47-0881)
• Multi-function Keypad "TP-G1" Instruction Manual	(INR-SI47-0890-E)
• FRENIC Loader Instruction Manual	(INR-SI47-1185-E)
• Pump Control Instruction Manual	(INR-SI47-1107-E)
• Profibus DP Interface Card “OPC-F1-PDP” Instruction Manual	(INR-SI47-1144-JE)
• Device Net Interface Card “OPC-F1-DEV” Instruction Manual	(INR-SI47-0904)
• LonWorks Interface Card “OPC-F1-LNW” Instruction Manual	(INR-SI47-1071a)

The materials are subject to change without notice. Be sure to get the latest editions for use.

1. SAFETY INFORMATION AND CONFORMITY TO STANDARDS

1.1 Safety information

Read this manual thoroughly before proceeding with installation, connections (wiring), operation, or maintenance and inspection. Ensure you have enough knowledge of the device and familiarize yourself with all safety information and precautions before proceeding to operate the inverter.
Safety precautions are classified into the following two categories in this manual.

⚠WARNING	Not considering the information indicated by this symbol may lead to dangerous conditions, possibly resulting in death or serious bodily injuries.
⚠CAUTION	Not considering the information indicated by this symbol may lead to dangerous conditions, possibly resulting in minor or light bodily injuries and/or substantial property damage.

Not considering the information contained under the CAUTION title can also result in serious consequences. These safety precautions are of utmost importance and must be observed at all times.

Application

⚠WARNING

- FRENIC-Eco is designed to drive a three-phase induction motor. Do not use it for single-phase motors or for other purposes. **Fire or an accident could occur.**
- FRENIC-Eco may not be used for a life-support system or other purposes directly related to human safety.
- Though FRENIC-Eco is manufactured under strict quality control, install safety devices for applications where serious accidents or material losses are foreseen in relation to the failure of it. **An accident could occur.**

Installation

⚠WARNING

- Install the inverter on a nonflammable material such as metal. **Otherwise fire could occur.**
- Do not place flammable matter nearby. **Doing so could cause fire.**

⚠CAUTION

- Do not support the inverter by its terminal block cover during transportation. **Doing so could cause the inverter to drop and injuries.**
- Prevent lint, paper fibers, sawdust, dust, metallic chips, or other foreign materials from getting into the inverter or from accumulating on the heat sink. **Otherwise, a fire or an accident might result.**
- Do not install or operate an inverter that is damaged or lacking parts. **Doing so could cause fire, an accident or injuries.**
- Do not get on a shipping box.
- Do not stack shipping boxes higher than the indicated information printed on those boxes. **Doing so could cause injuries.**

Maintenance, inspection, and parts replacement

⚠WARNING

- Turn the power OFF and wait for at least five minutes for models of 30 kW or below, or ten minutes for models of 37 kW or above, before starting inspection. Further, check that the LED monitor is unlit, and check the DC link bus voltage between the P (+) and N (-) terminals to be lower than 25 VDC. **Otherwise, electric shock could occur.**
- Maintenance, inspection, and parts replacement should be made only by qualified persons.
- Take off the watch, rings and other metallic matter before starting work.
- Use insulated tools. **Otherwise, electric shock or injuries could occur.**

Disposal

⚠CAUTION

- Handle the inverter as an industrial waste when disposing of it. **Otherwise injuries could occur.**

Others

⚠WARNING

- Never attempt to modify the inverter. **Doing so could cause electric shock or injuries.**

Wiring

⚠WARNING

- When wiring the inverter to the power source, insert a recommended moulded case circuit breaker (MCCB) or residual-current-operated protective device (RCD)/earth leakage circuit breaker (ELCB) with overcurrent protection in the path of power lines. Use the devices within the recommended current range.
- Use wires in the specified size. **Otherwise, fire could occur.**
- Do not use one multicore cable in order to connect several inverters with motors.
- Do not connect a surge killer to the inverter's output (secondary) circuit. **Doing so could cause fire.**
- Ground the inverter following national/local electric code, depending on the input (primary) voltage of the inverter. **Otherwise, electric shock could occur.**
- Qualified electricians should carry out wiring.
- Be sure to perform wiring after turning the power OFF. **Otherwise, electric shock could occur.**
- Be sure to perform wiring after installing the inverter body. **Otherwise, electric shock or injuries could occur.**
- Ensure that the number of input phases and the rated voltage of the product match the number of phases and the voltage of the AC power supply to which the product is to be connected. **Otherwise fire or an accident could occur.**
- Do not connect the power source wires to output terminals (U, V, and W). **Doing so could cause fire or an accident.**
- Generally, control signal wires do not have reinforced insulation. If they accidentally touch any live parts in the main circuit, their insulation coat may break for any reasons. In such a case, an extremely high voltage may be applied to the signal lines. Protect the signal line from contacting any high voltage lines. **Otherwise, an accident or electric shock could occur.**

⚠CAUTION

- Wire the three-phase motor to terminals U, V, and W of the inverter. **Otherwise injuries could occur.**
- The inverter, motor and wiring generate electric noise. Take care of malfunction of the nearby sensors and devices. To prevent the motor from malfunctioning, implement noise control measures. **Otherwise an accident could occur.**

Setting control switches

⚠WARNING

- Before setting up any internal control switches, turn OFF the power, wait more than five minutes for models of 30 kW or below, or ten minutes for models of 37 kW or above, and make sure, using a multimeter or a similar instrument, that the DC link bus voltage between the terminals P (+) and N (-) has dropped below a safe voltage (+25 VDC)**. Otherwise electric shock could occur.**

Operation

⚠WARNING

- Be sure to install the terminal block cover and the front cover before turning the power ON. Do not remove the covers while power is applied. **Otherwise electric shock could occur.**
- Do not operate switches with wet hands. **Doing so could cause electric shock.**
- If the retry function has been selected, the inverter may automatically restart and drive the motor depending on the cause of tripping. (Design the machinery or equipment so that human safety is ensured after restarting.)
- If the stall prevention function (current limiter), automatic deceleration, and overload prevention control have been selected, the inverter may operate at an acceleration/deceleration time or frequency different from the commanded ones. Design the machine so that safety is ensured even in such cases. **Otherwise an accident could occur.**
- The STOP key is only effective when function setting (Function code F02) has been established to enable the STOP key. Prepare an emergency stop switch separately. If you disable the STOP key priority function and enable operation by external commands, you cannot emergency-stop the inverter using the STOP key on the keypad.
- If an alarm reset is made with the Run command signal turned ON, a sudden start will occur. Ensure that the Run command signal is turned OFF in advance. **Otherwise an accident could occur.**
- If you enable the "restart mode after momentary power failure" (Function code F14 = 3, 4, or 5), then the inverter automatically restarts running the motor when the power is recovered. Design the machinery or equipment so that human safety is ensured after restarting.
- If you set the function codes incorrectly or without completely understanding this instruction manual and the FRENIC-Eco User's Manual (MEH456), the motor may rotate with a torque or at a speed not permitted for the machine. **An accident or injuries could occur.**
- Do not touch the inverter terminals while the power is applied to the inverter even if the inverter stops. **Doing so could cause electric shock.**

⚠CAUTION

- Do not turn the main circuit power (circuit breaker) ON or OFF in order to start or stop inverter operation. **Doing so could cause failure.**
- Do not touch the heat sink because it becomes very hot. **Doing so could cause burns.**
- Setting the inverter to high speeds is easy. Before changing the frequency (speed) setting, check the specifications of the motor and machinery.
- The brake function of the inverter does not provide mechanical holding means. **Injuries could occur.**

GENERAL PRECAUTIONS

Drawings in this manual may be illustrated without covers or safety shields for explanation of detail parts. Restore the covers and shields in the original state and observe the description in the manual before starting operation.

1.2 Conformity to European standards

The CE marking on Fuji products indicates that they comply with the essential requirements of the Electromagnetic Compatibility (EMC) Directive 89/336/EEC issued by the Council of the European Communities and the Low Voltage Directive 73/23/EEC.

EMC-filter built-in inverters that bear a CE Marking are in conformity with EMC Directives. Inverters having no EMC filter can be in conformity with EMC Directives if an optional EMC-compliant filter is connected to them.

General-purpose inverters are subject to the regulations set forth by the Low Voltage Directive in the EU. Fuji Electric declares the inverters bearing a CE marking are compliant with the Low Voltage Directive.

■ The FRENIC-Eco series of inverters conforms to the following standards:

Low Voltage Directive EN50178:1997

EMC Directives EN61800-3:2004

For further information please check the FRENIC-Eco user's manual.

Considerations when using FRENIC-Eco as a product with conformity to Low Voltage Directive

If you wish to use a FRENIC-Eco series inverter as a product with conformity to the Low Voltage Directive, refer to the related guidelines.

2. MECHANICAL INSTALLATION

2.1 Installing the inverter

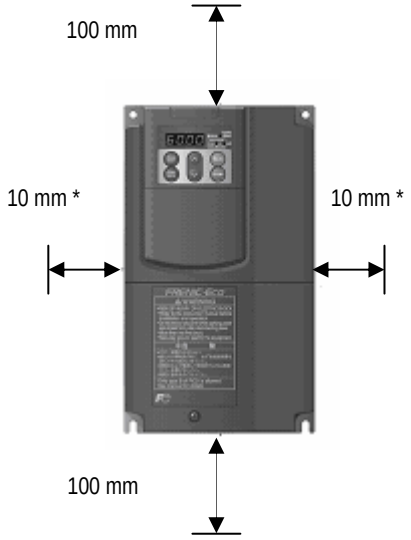

Mounting base

The inverter should be mounted on a base made of material that can withstand heat sink temperature, which can rise up to 90ºC approx. during inverter operation.

Clearances

Ensure that the minimum clearances indicated are maintained at all times. When installing the inverter in the enclosure of your system, take extra care with ventilation inside the enclosure as the temperature around the inverter will tend to increase. Do not install the inverter in a small enclosure with poor ventilation.

* For 400V class 90kW or above a 50 mm clearance is needed instead of 10 mm (left and right sides).

As long as the ambient temperature is 40°C or lower, 5.5 kW or lower inverters may be mounted side-by-side without any gap between them.
For others inverters, please follow the clearances needed.

2.2 Removing and mounting the inverter covers (for inverters 37kW or above, please refer to user's manual for details)

For mounting the covers, please follow removing instructions in the opposite way.

① To remove the terminal block cover, loose the screw, hold the cover using the labelled "PULL" indication, pull it up towards you.

② To remove the front cover (keypad cover), hold it with both hands, slide it downwards, disengage the latch, tilt the front cover towards you and pull it upwards.

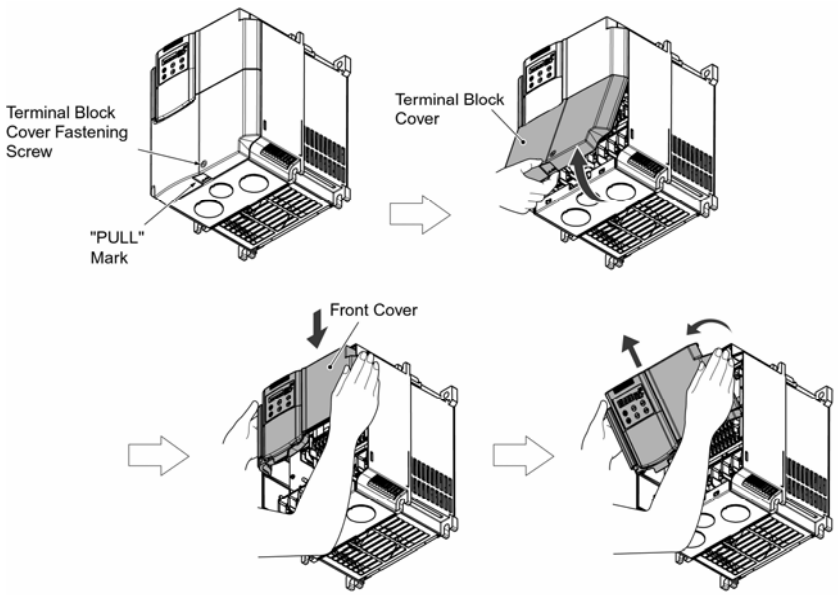

3. ELECTRICAL INSTALLATION

3.1. Power terminals

Symbol	Name	Description
L1/R, L2/S, L3/T	Main power inputs	Connect the 3-phase input power lines Input voltage for F1S-4: 380-460V AC 50/60Hz Input voltage for F1S-2: 200-230V AC 50/60Hz
U, V, W	Inverter outputs	Connect a 3-phase motor
R0, T0	Auxiliary power input	For a backup of the control circuit power supply, connect AC power lines same as that of the main power input
P1, P(+)	DC reactor connection	Connect a DC reactor (DCRE) for improving power factor (an option for the inverter whose capacity is 55 kW or below)
P(+), N(-)	DC link bus	An optional PWM regenerative converter may be connected to these terminals
R1, T1	Auxiliary power input for the fans	Auxiliary power input for the fans for 55KW or above inverters (400V AC series) or 45KW or above inverters (200V AC series)
⏚G x 2	Ground terminals	Grounding terminals for the inverter's chassis (or case) and motor. Earth one of the terminals and connect the grounding terminal of the motor. Inverters provide a pair of grounding terminals that function equivalently

3.2. Control terminals

The FRENIC-Eco has 7 digital inputs, 3 transistor outputs, 2 relay outputs and 2 analog outputs. All of them are programmable.

Symbol	Name	Programmable	Example of use	Description
PLC	Internal power supply	--	--	24V DC max. current 50mA
CM	Digital common	--	--	Common terminal (0V)
FWD	Digital input	YES	RUN command	External run command (forward) Set the required function in E98
REV	Digital input	YES	RUN command	External run command (reverse) Set the required function in E99
X1, X2, X3, X4 and X5	Digital inputs	YES	Speed selection, coast to stop,...	Programmable digital inputs Set the required function in E01 to E05
Y5 A/C	Digital relay output	YES	MC control signal, inverter ready,...	Programmable digital outputs (relay outputs) Set the required function in E24 and E27
30 A,B,C	Digital relay output	YES	To indicate if inverter is under error (alarm)	
Y1, Y2 and Y3	Digital transistor outputs	YES	Same as relay output Y5A/C and 30A/B/C	Programmable digital outputs (transistor outputs) Set the required function in E20 to E22
CMY	Transistor output common	--	--	Common terminal for digital transistor outputs (Y1 to Y3)
13	Potentiometer power supply	--	--	Potentiometer 1 - 5 KΩ 10V DC 10 mA max.
12	Analog input (0 - 10 V DC)	--	Pressure command	Max. input voltage +15 V DC Input impedance 22 KΩ
C1	Analog input (4 - 20 mA DC)	--	Feedback	Max. current +30 mA DC Input impedance 250 Ω
V2	Analog input (0 - 10 V DC)	--	Pressure command	Max. input voltage +15 V DC Input impedance 22 KΩ
11	Common terminal for analog inputs and outputs	--	--	Common terminal for analog input and output terminals
FMA	Analog output	YES	Motor output (kW), output current,...	0 - 10 V DC or 4 - 20 mA DC selectable Input impedance of external device: 0 - 10 V DC: 5 KΩ; 4 - 20 mA DC: 500 Ω
FMI	Analog output	YES	Motor output (kW), Output current,...	4 - 20 mA DC no selectable Input impedance of external device: 500 Ω

3.3. Wiring diagram

Following there is a basic wiring diagram.

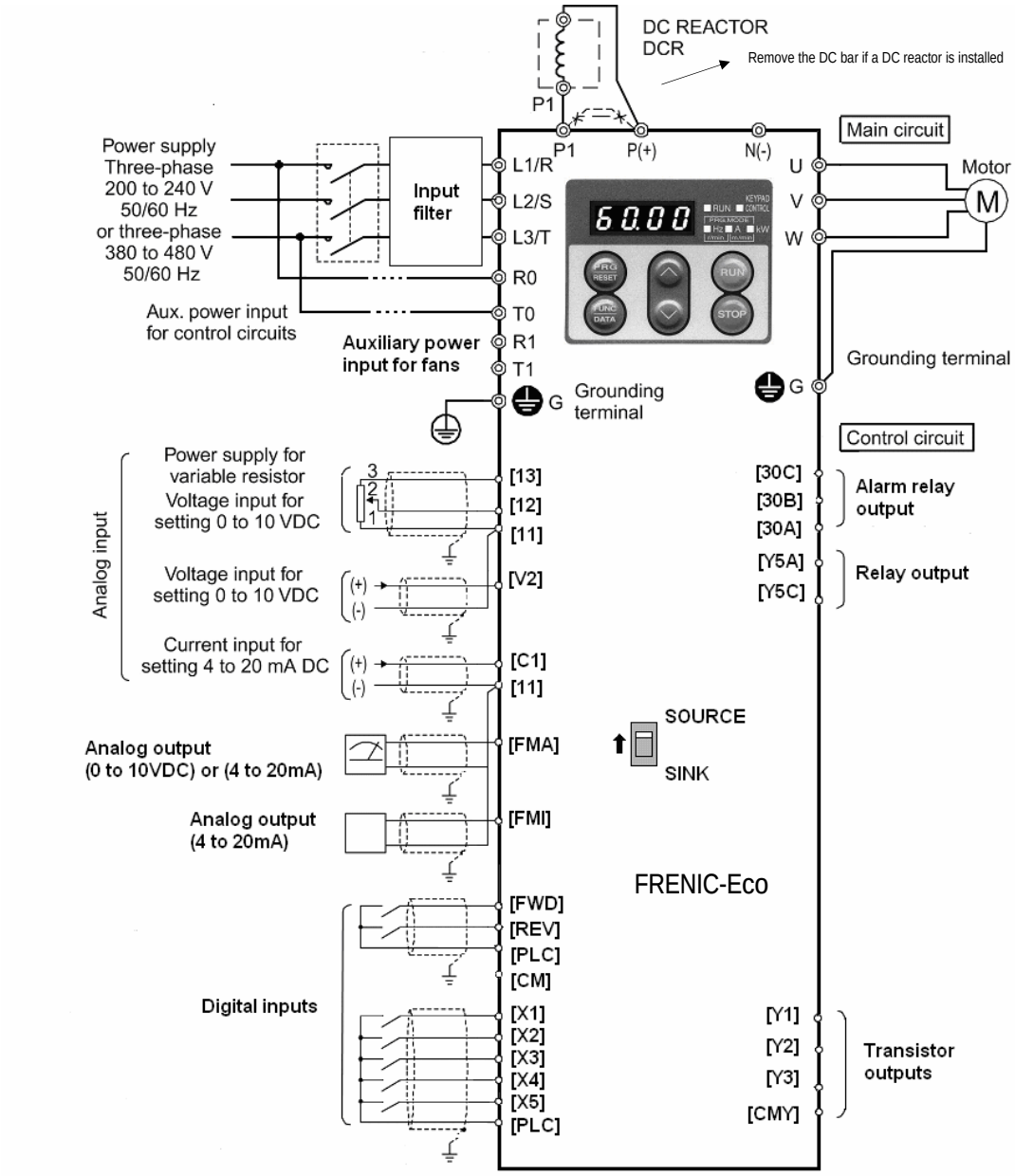

3.4. Digital inputs (X1, X2, X3, X4, X5, FWD and REV)

The digital inputs can be operated in PNP logic (ON level by means of +24V DC) or NPN logic (ON level by means of 0V). The logic is selectable by using the switch SW1 located on the inverter control board (please refer to chapter 3.6).

Example connection: PNP logic (SOURCE)

(a) Using external power supply

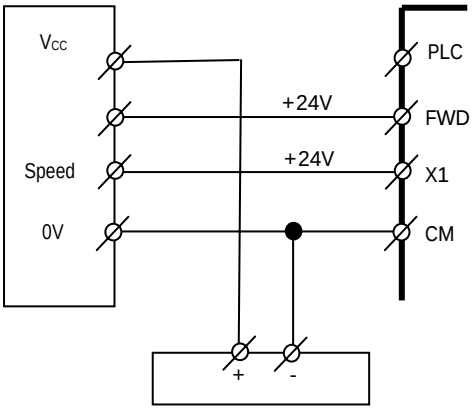

24 VDC power supply

(b) Using inverter power supply

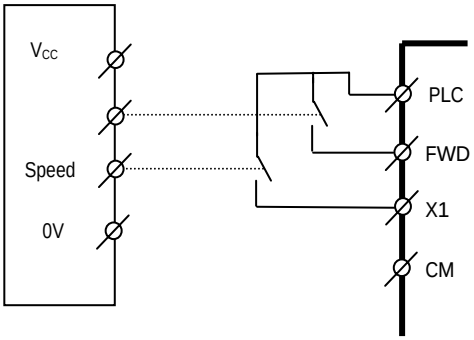

Example connection: NPN logic (SINK)

(a) Using external power supply

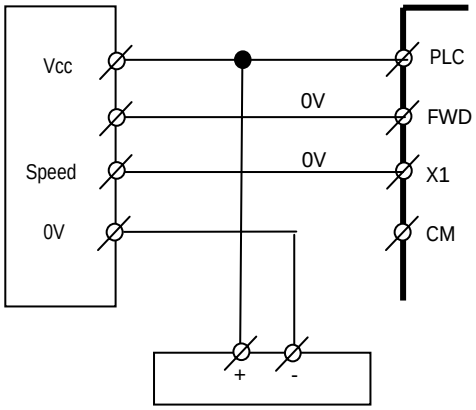

24 VDC power supply

(b) Using inverter power supply

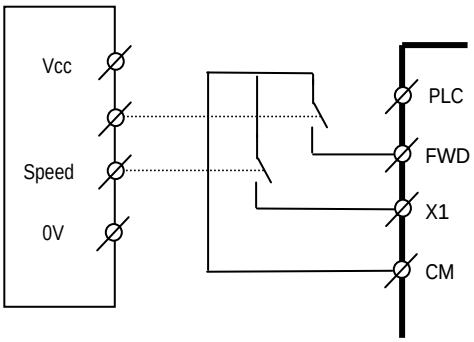

Electrical specification for digital inputs:
(X1 to X5, FWD and REV)

Item		Min	Max
SINK	ON level	0 V DC	2V DC
	OFF level	22 V DC	27V DC
SOURCE	ON level	22 V DC	27V DC
	OFF level	0 V DC	2V DC

Item	Min	Max
Max. operation current at ON	2.5 mA	5 mA
Allowable leakage current at OFF	-	0.5 mA

3.5. Digital outputs (Y1, Y2, Y3, Y5A/C and 30A/B/C)

Transistor digital outputs can be operated both in PNP (SOURCE) or NPN (SINK) logic. The logic is selectable depending on the connection is made. Connecting the “PLC” terminal to the transistor common “CMY” terminal you get PNP logic. Connecting the “CM” terminal to the transistor common “CMY” terminal you get NPN logic.

Connection example: output “PNP” logic

a) Using external power supply

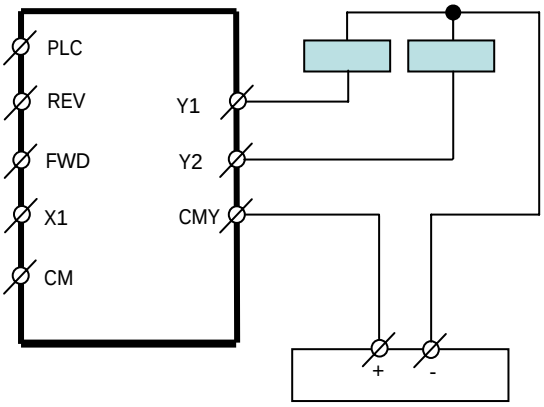

24 VDC power supply

(b) Using inverter power supply

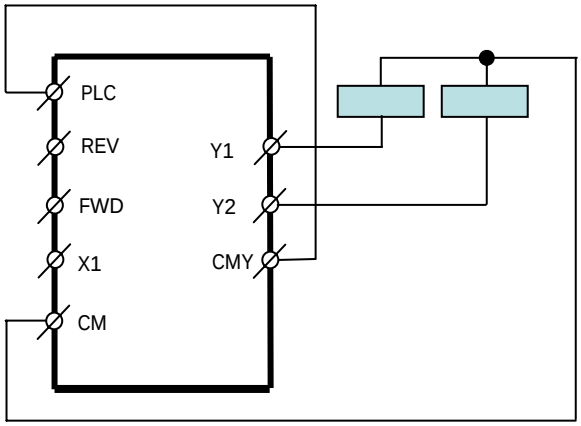

Connection example: output “NPN” logic

a) Using external power supply

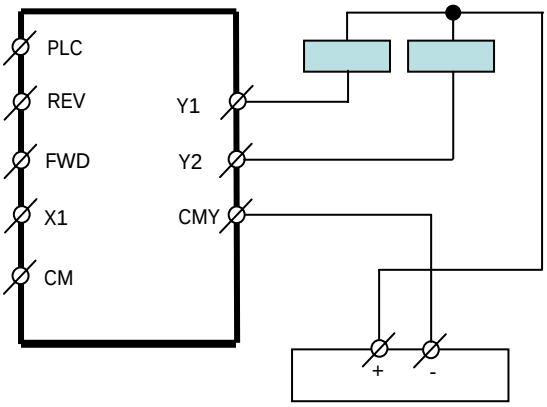

24 VDC power supply

(b) Using inverter power supply

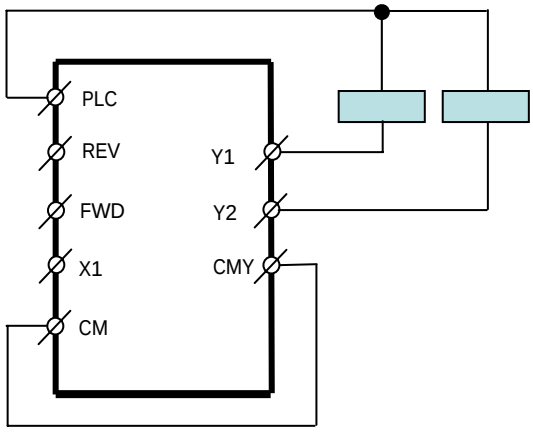

Electrical specifications for transistor digital outputs:
(Y1, Y2 and Y3)

Item		Max
Operation voltage	ON level	3V DC
	OFF level	27V DC
Maximum operation current at ON		50 mA
Leakage current at OFF		0,1 mA

Electrical specifications for relay digital outputs:
(Y5A/C and 30A/B/C)

48V DC, 0.5 A
250V AC, 0.3A, cos ϕ = 0.3

3.6 Setting up the slide switches

Switching the slide switches located on the PCB allows you to customize the operation mode of the analog output terminals, digital I/O terminals, and communication ports. The locations of those switches are shown in Figure 3.1.
To switch the slide switches, remove the front and terminal block covers, so that you can see the control PCB that contains the switches. Furthermore, for models of 37 kW or above, open the keypad enclosure. Table 3.1 lists function of each slide switch.

Table 3.1. Function of Each Slide Switch

<table>
<tr><th>Switch</th><th>Function</th></tr>
<tr><td>① SW1</td><td>Switches service mode of the digital input terminals for SINK or SOURCE.
- To make the digital input terminal [X1] to [X5], [FWD] or [REV] serve as a current sink, switch SW1 to SINK.
- To make them serve as a current source, switch SW1 to SOURCE.</td></tr>
<tr><td>② SW3</td><td>Switches on/off the terminating resistor of RS485 communications port of the inverter.
- To connect a keypad to the inverter switch SW3 to OFF (factory default).
- If the inverter is connected to the RS485 communications network as a termination device, switch it to ON.</td></tr>
<tr><td>③ SW4</td><td>Switches output mode of the analog output terminal FMA to voltage or current.
When switching this switch, change also data of the function code F29.
<table>
<tr><th></th><th>Switch SW4 to:</th><th>Set data of F29 to:</th></tr>
<tr><td>Voltage output (Factory default)</td><td>VO</td><td>0</td></tr>
<tr><td>Current output</td><td>IO</td><td>1</td></tr>
</table></td></tr>
<tr><td>④ SW5</td><td>Switches property of the analog input terminal V2 for voltage input or PTC.
When switching this switch, change also data of the function code H26
<table>
<tr><th></th><th>Switch SW5 to:</th><th>Set data of H26 to:</th></tr>
<tr><td>Analog frequency command source in voltage input (Factory default)</td><td>V2</td><td>0</td></tr>
<tr><td>PTC thermistor input</td><td>PTC</td><td>1 or 2</td></tr>
</table></td></tr>
</table>

Figure 3.1. Location of the slide switches

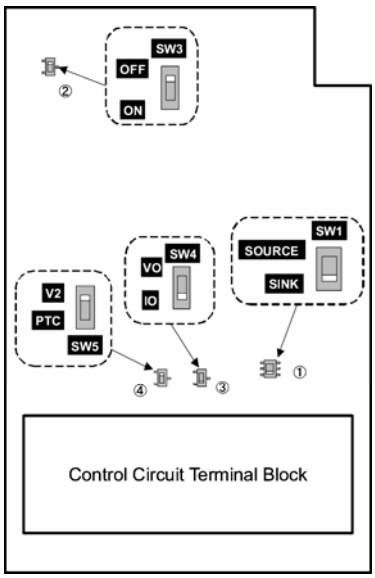

Switching example

SW1

SINK	SOURCE
⬇	⬆

SW3

RS485 comm. port terminator	
ON	OFF
⬇	⬆

4. OPERATION USING THE KEYPAD

The keypad consists of a 4 digit LED monitor, 5 LED indicators, and 6 keys, as shown in the figure.

The keypad allows you to start and stop the motor, monitor running status and switch to the menu mode. In the menu mode you may set the function code data, monitor I/O signal states and check the maintenance information as well as the alarm information.

The keypad has 3 operation modes: programming mode, running mode and alarm mode.

Monitor, keys \ Operation mode		Programming mode		Running mode		Alarm mode
		STOP	RUN	STOP	RUN	
Monitor	Function	Displays the function code or data		Displays the output frequency, set frequency, loader motor speed, required power, output current and output voltage		Displays the alarm description and alarm history
	Display	ON		Blinking	ON	Blinking/ON
	Function	The program mode is indicated		Displays the unit of frequency, output current, required power, speed and line speed.		None
	Display	PRG.MODE Hz A kW r/min m/min ON		Frequency indication PRG.MODE Hz A kW r/min m/min ON Current indication PRG.MODE Hz A kW r/min m/min ON	Speed indication PRG.MODE Hz A kW r/min m/min ON Capacity of current indication PRG.MODE Hz A kW r/min m/min Blink or lit	OFF
	KEYPAD CONTROL Function	Operation selection (keypad operation/terminal operation) is displayed				
	KEYPAD CONTROL Display	Lit in keypad operation mode (F02 = 0, 2 or 3)				
	RUN Function	Absence of operation command is displayed	Presence of operation command is displayed	Absence of operation command is displayed	Presence of operation command is displayed	Stop state due to trip is displayed
	RUN Display	RUN	RUN	RUN	RUN	If an alarm occurs during operation, unlit during keypad operation or lit during terminal block operation

Keys	PRG RESET Function	Switches to running mode Digit shift (cursor movement) in data setting		Switches to programming mode		Releases the trip and switches to stop mode or running mode
	FUNC DATA Function	Determines the function code, stores and updates data		Switches the LED monitor display		Displays the operation information
	Function	Increases/decreases the function code and data		Increases/decreases the frequency, motor speed and other settings		Displays the alarm history
	RUN Function	Invalid		Starts running (switches to running mode (RUN))	Invalid	Invalid
	STOP Function	Invalid	Deceleration stop (switches to programming mode STOP)	Invalid	Deceleration stop (switches to running mode STOP)	Invalid

- If F02 = 1, the RUN key will not be enabled (RUN command by digital input terminals).
- If F02 = 1, the STOP key will not be enabled (RUN/STOP command by digital input terminals).
- If H96 = 1 or 3, STOP key located on the keypad will stop the motor with priority, even if other RUN/STOP commands are enabled.

5. QUICK START COMMISSIONING

5.1 Inspection and preparation prior to powering on

(1) Please check if the power wires are correctly connected to the inverter input terminals L1/R, L2/S and L3/T, if the motor is connected to the inverter terminals U, V and W and if the grounding wires are connected to the ground terminals correctly.

⚠ WARNING

- Do not connect power supply wires to the inverter output terminals U, V, and W. Otherwise, the inverter may be damaged if you turn the power on.
- Be sure to connect the grounding wires of the inverter and the motor to the inverter ground terminals.

Otherwise an electric shock may occur

(2) Check for short circuits between terminals and exposed live parts and ground faults.
(3) Check for loose terminals, connectors and screws.
(4) Check if the motor is separated from mechanical equipment.
(5) Turn the switches off so that the inverter does not start or operate erroneously at power-on.
(6) Check if safety measures are taken against runaway of the system, e.g., a defense to protect people from unexpectedly approaching your power system.

Power circuit terminal wiring

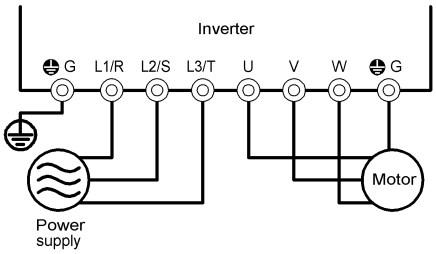

5.2 Setting the function codes

Set next function codes data according to motor ratings and application values. For the motor, check the rated values printed on the nameplate of the motor.

Code	Name	Description
F 03	Maximum frequency	Motor characteristics
F 04	Base frequency	
F 05	Rated voltage	
F 07	Acceleration time 1	Application values
F 08	Deceleration time 1	
P 02	Motor rated capacity	Motor characteristics
P 03	Motor rated current	

5.3 Quick start commissioning (auto tuning)

Even if it is not extremely necessary, the auto tuning procedure should be performed before running the motor for the first time. There are two auto tuning modes: auto tuning mode 1 (static) and auto tuning mode 2 (dynamic).

Auto tuning mode 1 (P04 = 1): P07 and P08 function code values are measured.
Auto tuning mode 2 (P04 = 2): The no load current (P06 function code) is measured as well as P07 and P08. When choosing this option, please remove the mechanical load from the motor.

⚠ WARNING
The motor will start moving if Auto tuning mode 2 is chosen

Auto tuning procedure

1. Power on the inverter.
2. Switch the operation mode from remote to local (by means of F02 = 2 or 3).
3. If there are any kind of contactors between the motor and the inverter, please close them manually.
4. Set P04 to 1 (Auto tuning mode 1) or P04 to 2 (auto tuning mode 2), press FUNC/DATA and press RUN (the current flow going through the motor winding will generate a sound). The auto tuning takes a few seconds until is finished itself.
P06 will be measured as well as P07 and P08 if auto tuning mode 2 has been selected.

The auto tuning procedure has been finished.

LOCAL MODE TEST

(1) Set F02 = 2 or F02 = 3 to select the local mode (RUN command given by the keypad).
(2) Switch the inverter on and check the LED keypad is displaying and blinking *0.00* Hz.
(3) Set a low frequency using the arrow keys ⌃ / ⌄ (check if the new frequency is already blinking in the LED keypad). Press PRG/RESET during one second to move the cursor across the LED keypad.
(4) Press FUNC/DATA to store the new selected frequency.
(5) Press RUN key to start driving the motor.
(6) Press STOP key to stop the motor.

5.4 Operation

After confirming the inverter can drive the motor, connect the motor to the machine and adjust the necessary function codes. Depending on the application conditions, further adjustments may be required: such as adjustments of torque boost (F09), acceleration time (F07), and deceleration time (F08). Make sure to set relevant function codes properly.

6. FUNCTION CODES AND APPLICATION EXAMPLES

6.1 Function codes tables and basic description

Function codes enable the FRENIC-Eco series of inverters to be set up to match your system requirements.
The function codes are classified into eight groups: Fundamental Functions (F codes), Extension Terminal Functions (E codes), Control Functions of Frequency (C codes), Motor Parameters (P codes), High Performance Functions (H codes), Application Functions (J codes), Link Function (y codes) and Option Functions (o codes). For Option function (o codes), refer to the instruction manual for the option.
For further information about the FRENIC-Eco function codes please refer to FRENIC-Eco user's manual.
For further information about pump control please refer to the pump control instruction manual.

F codes: Fundamental functions

Code	Name		Setting range	Default setting	Actual setting
F00	Data protection		0: Disable data protection (function code can be edited) 1: Enable data protection	0	
F01	Frequency command 1		0: Enable arrow keys on the keypad 1: Enable voltage input to terminal [12] (0 to 10V DC) 2: Enable current input to terminal [C1] (4 to 20 mA) 3: Enable sum of voltage and current inputs terminals [12] and [C1] 5: Enable voltage input to terminal [V2] (0 to 10V DC) 7: Enable terminal command (UP) / (DOWN) control	0	
F02	RUN command		0: Enable RUN / STOP keys on the keypad (Motor rotational direction from digital input signals FWD/REV) 1: Enable terminal command FWD or REV 2: Enable RUN / STOP keys on keypad (forward) 3: Enable RUN / STOP keys on keypad (reverse)	2	
F03	Maximum frequency		25.0 to 120.0 Hz	50.0 Hz	
F04	Base frequency		25.0 to 120.0 Hz	50.0 Hz	
F05	Rated voltage at base frequency		0: Output a voltage in proportion to input voltage 80 to 240V: Output a voltage AVR-controlled (200V AC series) 160 to 500V: Output a voltage AVR-controlled (400V AC series)	400 V	
F07	Acceleration time 1		0.00 to 3600 s (Entering 0.00 cancels the acceleration time, requiring external soft-start)	20.0 s	
F08	Deceleration time 1		0.00 to 3600 s (Entering 0.00 cancels the deceleration time, requiring external soft-start)	20.0 s	
F09	Torque boost		0.0 to 20.0 % (percentage of the rated voltage at base frequency (F05)). This setting is effective when F37 = 0,1,3 or 4	Depend on the inverter power capacity	
F10	Electronic thermal overload protection for motor	Selection motor charact.	1: For general-purpose motors with built-in-self-cooling fan 2: For separately excited motor fan	1	
F11		Overload detection level	0.0: Disable 1 to 135% of the rated current (allowable continuous drive current) of the motor	100 % of the motor rated current	
F12		Thermal time constant	0.5 to 75.0 min	5.0 min (22kW or below) / 10.0 min (30kW or above)	
F14	Restart mode after momentary power failure (Mode selection)		0: Disable restart (trip immediately) 1: Disable restart (trip after a recovery from power failure) 3: Enable restart (continue to run, for heavy inertia or general loads) 4: Enable restart (restart at the frequency at which the power failure occurred, for general loads) 5: Enable restart (restart at the starting frequency, for low-inertia load)	0	
F15	Frequency limiter	High	0 to 120.0 Hz	70.0 Hz	
F16		Low	0 to 120.0 Hz	0.0 Hz	
F18	Bias (frequency command 1)		-100.00 to 100.00 %	0.00 %	
F20	DC braking	Start freq.	0.0 to 60.0 Hz	0.0 Hz	
F21		Braking level	0 to 60 % (100% is interpreted as rated output current of the inverter)	0 %	
F22		Braking time	0.00: Disable 0.01 to 30.00 s	0.00 s	
F23	Starting frequency		0.1 to 60.0 Hz	0.5 Hz	
F25	Stop frequency		0.1 to 60.0 Hz	0.2 Hz	

Code	Name		Setting range	Default setting	Actual setting
F26	Motor sound	Carrier frequency	0.75 to 15 kHz (22kW or below) 0.75 to 10 kHz (30kW to 75kW) 0.75 to 6 kHz (90kW or above)	15/10/6 kHz	
F27		Sound tone	0: Level 0 (Inactive) 1: Level 1 2: Level 2 3: Level 3	0	
F29	Analog ouptut (FMA)	Mode selection	0: Output in voltage (0 to 10V DC) 1: Output in current (4 to 20mA DC)	0	
F30		Output adjust.	0 to 200 %	100 %	
F31		Function	Select a function to be monitored from the following 0: Output frequency 2: Output current 3: Output voltage 4: Output torque 5: Load factor 6: Input power 7: PID feedback value (PV) 9: DC link bus voltage 10: Universal AO 13: Motor output 14: Calibration analog output (+10V DC / 20 mA DC) 15: PID process command (SV) 16: PID process output (MV)	0	
F34	Analog output (FMI)	Duty	0 to 200 %: Voltage output adjustment	100 %	
F35		Function	Select a function to be monitored from the following: 0: Output frequency 2: Output current 3: Output voltage 4: Output torque 5: Load factor 6: Input power 7: PID feedback value (PV) 9: DC link bus voltage 10: Universal AO 13: Motor output 14: Calibration analog output (20 mA DC) 15: PID process command (SV) 16: PID process output (MV)	0	
F37	Load selection/ Auto torque boost/ Auto energy saving operation		0: Variable torque load increasing in proportion to square of speed 1: Variable torque load increasing in proportion to square of speed (Higher startup torque required) 2: Auto-torque boost 3: Auto-energy saving operation (Variable torque load increasing in proportion to square of speed) 4: Auto-energy saving operation (Variable torque load increasing in proportion to square of speed; higher startup torque required) Note: Apply this setting to a load with short acceleration time. 5: Auto-energy saving operation (Auto-torque boost) Note: Apply this setting to a load with long acceleration time.	1	
F43	Current limiter	Mode selection	0: Disable (No current limiter works) 1: Enable at constant speed (Disabled during acceleration and deceleration) 2: Enable during acceleration and at constant speed	0	
F44		Level	20 to 120 % (100% is interpreted as rated output current of the inverter)	110 %	

	The shaded function codes are applicable to the quick setup menu

E codes: Extension terminal functions

Code	Name	Data setting range	Default setting	Actual setting
E01	Command assignment to: [X1] [X2] [X3] [X4] [X5]	Selecting function code data assigns the corresponding function to terminals [X1] to [X5] as listed below. Setting the value of 1000s in parentheses () shown below assigns a negative logic input to a terminal. In the case of (THR) and (STOP), data 1009 and 1030 are for normal logic and 9 and 30 are for negative logic, respectively. 0 (1000): Select multistep frequency (SS1) 1 (1001): Select multistep frequency (SS2) 2 (1002): Select multistep frequency (SS4) 3 (1003): Select multistep frequency (SS8) 6 (1006): Enable 3-wire operation (HLD) 7 (1007): Coast to stop (BX) 8 (1008): Reset alarm (RST) 9 (1009): Enable external alarm trip (THR) 11 (1011): Switch frequency command 2/1 (Hz2/Hz1) 13: Enable DC brake (DCBRK) 15: Switch to commercial power (50 Hz) (SW50) 16: Switch to commercial power (60 Hz) (SW60) 17 (1017): UP (Increase output frequency) (UP) 18 (1018): DOWN (Decrease output frequency) (DOWN) 19 (1019): Enable write from keypad (Data changeable) (WE-KP) 20 (1020): Cancel PID control (Hz/PID) 21 (1021): Switch normal/inverse operation (IVS) 22 (1022): Interlock (IL) 24 (1024): Enable communications link via RS485 or field bus (option) (LE) 25 (1025): Universal DI (U-DI) 26 (1026): Select starting characteristics (STM) 30 (1030): Force to stop (STOP) 33 (1033): Reset PID integral and differential components (PID-RST) 34 (1034): Hold PID integral component (PID-HLD) 35 (1035): Select local (keypad) operation (LOC) 38 (1038): Enable to run (RE) 39: Protect motor from dew condensation (DWP) 40: Enable integrated sequence to switch to commercial power (50 Hz) (ISW50) 41: Enable integrated sequence to switch to commercial power (60 Hz) (ISW60) 50 (1050): Clear periodic switching time (MCLR) 51 (1051): Enable pump drive (motor 1) (MEN1) 52 (1052): Enable pump drive (motor 2) (MEN2) 53 (1053): Enable pump drive (motor 3) (MEN3) 54 (1054): Enable pump drive (motor 4) (MEN4) 87 (1087): Switch RUN command 2/1 (FR2/FR1) 88: RUN forward 2 (FWD2) 89: RUN reverse 2 (REV2)	6	
E02			7	
E03			8	
E04			11	
E05			35	
E14	Acceleration Time (Multistep Frequency + UP/DOWN)	0.00 to 3600 s	20.00	
E15	Deceleration Time (Multistep Frequency + UP/DOWN)			

Code	Name	Data setting range	Default setting	Actual setting
E20	Command assignment to: [Y1] [Y2] [Y3] [Y5A/C] [30A/B/C]	Selecting function code data assigns the corresponding function to terminals [Y1] to [Y3], [Y5A/C], and [30A/B/C] as listed below. Setting the value of 1000s in parentheses () shown below assigns a negative logic input to a terminal.	0	
E21			1	
E22			2	
E24		0 (1000): Inverter running (RUN) 1 (1001): Frequency arrival signal (FAR) 2 (1002): Frequency detected (FDT) 3 (1003): Undervoltage detected (inverter stopped) (LU) 5 (1005): Inverter output limiting (IOL) 6 (1006): Auto-restarting after momentary power failure (IPF) 7 (1007): Motor overload early warning (OL) 10 (1010): Inverter ready to run (RDY) 11: Switch motor drive source between commercial power and inverter output (For MC on commercial line) (SW88) 12: Switch motor drive source between commercial power and inverter output (For primary side) (SW52-2) 13: Switch motor drive source between commercial power and inverter output (For secondary side) (SW52-1) 15 (1015): Select AX terminal function (For MC on primary side) (AX) 25 (1025): Cooling fan in operation (FAN) 26 (1026): Auto-resetting (TRY) 27 (1027): Universal DO (U-DO) 28 (1028): Heat sink overheat early warning (OH) 30 (1030): Service life alarm (LIFE) 33 (1033): Command loss detected (REF OFF) 35 (1035): Inverter output on (RUN2) 36 (1036): Overload prevention control (OLP) 37 (1037): Current detected (ID) 42 (1042): PID alarm (PID-ALM) 43 (1043): Under PID control (PID-CTL) 44 (1044): Motor stopping due to slow flowrate under PID control (PID-STP) 45 (1045): Low output torque detected (U-TL) 54 (1054): Inverter in remote operation (RMT) 55 (1055): Run command activated (AX2) 56 (1056): Motor overheat detected (PTC) (THM) 59 (1059): C1 disconnection detected (C1OFF) 60 (1060): Sequenced start motor 1, inverter-driven (M1_I) 61 (1061): Sequenced start motor 1, commercial-power driven (M1_L) 62 (1062): Sequenced start motor 2, inverter-driven (M2_I) 63 (1063): Sequenced start motor 2, commercial-power driven (M2_L) 64 (1064): Sequenced start motor 3, inverter-driven (M3_I) 65 (1065): Sequenced start motor 3, commercial-power driven (M3_L) 67 (1067): Sequenced start motor 4, commercial-power driven (M4_L) 68 (1068): Periodic switching early warning (MCHG) 69 (1069): Pump control limit signal (MLIM) 87 (1087): (FAR AND FDT) signal (FARFDT) 99 (1099): Alarm output (for any alarm) (ALM)	10	
E27			99	
E31	Frequency detection (FDT) — Detection level	0.0 to 120.0 Hz	50.0 Hz	
E32	Hysteresis	0.0 to 120.0 Hz	1.0 Hz	
E34	Overload early warning/ Current detection — Level	0: Disable Current value of 1% to 150% of the inverter rated current	100% of the motor rated current	
E35	Timer	0.01 to 600.00 s	10.00 s	
E40	PID display coefficient A	-999 to 0.00 to 999	100	
E41	PID display coefficient B	-999 to 0.00 to 999	0.00	
E43	LED monitor — Item selection	0: Speed monitor (Select by E48) 3: Output current 4: Output voltage 8: Calculated torque 9: Input power 10: PID process command (Final) 12: PID feedback value 14: PID output 15: Load factor 16: Motor output 17: Analog input	0	
E45	LCD monitor (only with multi-functional keypad TP-G1) — Item selection	0: Running status, rotational direction and operation guide 1: Bar charts for output frequency, current and calculated torque	0	
E46	Keypad TP-G1) — Language selection	0: Japanese 1: English 2: German 3: French 4: Spanish 5: Italian	1	
E47	Contrast control — 0 (Low) to 10 (High)	5		

Code	Name		Setting range	Default setting	Actual setting
E48	LED monitor	Speed item	0: Output frequency 3: Motor speed in r/min 4: Load shaft in r/min 7: Display speed in %	0	
E50	Coefficient for speed indication		0.01 to 200.00	30.00	
E51	Display coefficient for input watt-hour data		0.000: (Cancel / reset) 0.001 to 9999	0.010	
E52	Keypad (menu display mode)		0: Function code data editing mode (Menus #0, #1 and #7) 1: Function code data check mode (Menus #2 and #7) 2: Full-menu mode (Menus #0 through #7)	0	
E61	Analog input for (Extension function selection)	[12]	Selecting function code data assigns the corresponding function to terminals [12], [C1] and [V2] as listed below 0: None 1: Auxiliary frequency command 1 2: Auxiliary frequency command 2 3: PID process command 1 5: PID feedback value 20: Analog input monitor	0	
E62		[C1]		0	
E63		[V2]		0	
E64	Saving digital reference frequency		0: Auto saving (at the time of main power turned off) 1: Saving by pressing FUNC/DATA key	0	
E65	Command loss detection	Level	0: Decelerate to stop 20 to 120 % 999: Disable	999	
E80	Detect low torque	Detection level	0 to 150 %	20 %	
E81		Timer	0.01 to 600.00 s	20.00 s	
E98	Command assignment to: [FWD] [REV]		Selecting function code data assigns the corresponding function to terminals [FWD] and [REV] as listed below. Setting the value of 1000s in parentheses () shown below assigns a negative logic input to a terminal. In the case of (THR) and (STOP), data 1009 and 1030 are for normal logic and 9 and 30 are for negative logic, respectively.	98	
E99			0 (1000): Select multistep frequency (SS1) 1 (1001): Select multistep frequency (SS2) 2 (1002): Select multistep frequency (SS4) 3 (1003): Select multistep frequency (SS8) 6 (1006): Enable 3-wire operation (HLD) 7 (1007): Coast to stop (BX) 8 (1008): Reset alarm (RST) 9 (1009): Enable external alarm trip (THR) 11 (1011): Switch frequency command 2/1 (Hz2/Hz1) 13: Enable DC brake (DCBRK) 15: Switch to commercial power (50 Hz) (SW50) 16: Switch to commercial power (60 Hz) (SW60) 17 (1017): UP (Increase output frequency) (UP) 18 (1018): DOWN (Decrease output frequency) (DOWN) 19 (1019): Enable write from keypad (Data changeable) (WE-KP) 20 (1020): Cancel PID control (Hz/PID) 21 (1021): Switch normal/inverse operation (IVS) 22 (1022): Interlock (IL) 24 (1024): Enable communications link via RS485 or field bus (option) (LE) 25 (1025): Universal DI (U-DI) 26 (1026): Select starting characteristics (STM) 30 (1030): Force to stop (STOP) 33 (1033): Reset PID integral and differential components (PID-RST) 34 (1034): Hold PID integral component (PID-HLD) 35 (1035): Select local (keypad) operation (LOC) 38 (1038): Enable to run (RE) 39: Protect motor from dew condensation (DWP) 40: Enable integrated sequence to switch to commercial power (50 Hz) (ISW50) 41: Enable integrated sequence to switch to commercial power (60 Hz) (ISW60) 50 (1050): Clear periodic switching time (MCLR) 51 (1051): Enable pump drive (motor 1) (MEN1) 52 (1052): Enable pump drive (motor 2) (MEN2) 53 (1053): Enable pump drive (motor 3) (MEN3) 54 (1054): Enable pump drive (motor 4) (MEN4) 87 (1087): Switch run command 2/1 (FR2/FR1) 88: RUN forward 2 (FWD2) 89: RUN reverse 2 (REV2) 98: RUN forward (FWD) 99: RUN reverse (REV)	99	

The shaded function codes are applicable to the quick setup menu

C codes: Control functions of frequency

Code	Name		Data setting range	Default setting	Actual setting
C01	Jump frequency	1	0.0 to 120.0 Hz	0.0 Hz	
C02		2		0.0 Hz	
C03		3		0.0 Hz	
C04		Band	0.0 to 30.0 Hz	3.0 Hz	
C05	Multistep frequency	1	0.00 to 120.00 Hz	0.00 Hz	
C06		2		0.00 Hz	
C07		3		0.00 Hz	
C08		4		0.00 Hz	
C09		5		0.00 Hz	
C10		6		0.00 Hz	
C11		7		0.00 Hz	
C12		8		0.00 Hz	
C13		9		0.00 Hz	
C14		10		0.00 Hz	
C15		11		0.00 Hz	
C16		12		0.00 Hz	
C17		13		0.00 Hz	
C18		14		0.00 Hz	
C19		15		0.00 Hz	
C30	Frequency command 2		0: Enable arrow keys on the keypad 1: Enable voltage input to terminal [12] (0 to 10V DC) 2: Enable current input to terminal [C1] (4 to 20 mA) 3: Enable sum of voltage and current inputs to terminals [12] and [C1] 5: Enable voltage input to terminal [V2] (0 to 10V DC) 7: Enable terminal command (UP) / (DOWN) control	2	
Code	**Name**		**Data setting range**	**Default setting**	**Actual setting**
C32	Analog input adjustment for [12]	Gain for terminal input [12]	0.00 to 200.00 %	100.0 %	
C33		Filter time constant	0.00 to 5.00 s	0.05 s	
C34		Gain reference point	0.00 to 100.00 %	100.0 %	
C37	Analog input adjustment for [C1]	Gain for terminal input [C1]	0.00 to 200.00 %	100.0 %	
C38		Filter time constant	0.00 to 5.00 s	0.05 s	
C39		Gain reference point	0.00 to 100.00 %	100.0 %	
C42	Analog input adjustment for [V2]	Gain for terminal input [V2]	0.00 to 200.00 %	100.0 %	
C43		Filter time constant	0.00 to 5.00 s	0.05 s	
C44		Gain reference point	0.00 to 100.00 %	100.0 %	
C50	Bias reference point (Frequency command 1)		0.00 to 100.0 %	0.00 %	
C51	Bias for PID command 1	Bias value	-100.0 to 100.00 %	0.00 %	
C52		Bias reference point	0.00 to 100.00 %	0.00 %	
C53	Selection of normal/inverse operation (Frequency command 1)		0: Normal operation 1: Inverse operation	0	

P codes: Motor parameters

Code	Name		Data setting range	Default setting	Actual setting
P01	Motor	No. of poles	2 to 22	4	
P02		Rated capacity	0.01 to 1000 kW (If P99 is 0, 3 or 4) 0.01 to 1000 HP (If P99 is 1)	Rated capacity of the motor	
P03		Rated current	0.00 to 2000 A	Rated current of Fuji standard motor	
P04		Autotuning	0: Disable 1: Enable (Tune %R1 and %X while the motor is stopped) 2: Enable (Tune %R1 and %X while the motor is stopped and no-load current while running)	0	
P06		No-load current	0.00 to 2000 A	Rated value of Fuji standard motor	
P07		%R1	0.00 to 50.00 %	Rated value of Fuji standard motor	
P08		%X	0.00 to 50.00 %	Rated value of Fuji standard motor	
P99		Motor selection	0: Characteristics of motor 0 (Fuji standard motors, 8-series) 1: Characteristics of motor 1 (HP-rated motors) 3: Characteristics of motor 3 (Fuji standard motors, 6-series) 4: Other motors	0	

	The shaded function codes are applicable to the quick setup menu

H codes: High performance functions

Code	Name		Data setting range	Default setting	Actual setting
H03	Data initialization		0: Disable initialization 1: Initialize all function code data to the factory defaults 2: Initialize motor parameters	0	
H04	Auto-resetting	Times	0: Disable 1 to 10 times	0 times	
H05		Reset interval	0.5 to 20.0 s	5.0 s	
H06	Cooling fan ON/OFF control		0: Disable (Always in operation) 1: Enable (ON/OFF controllable)	0	
H07	Acceleration/Deceleration pattern		0: Linear 1: S-curve (Weak) 2: S-curve (Strong) 3: Curvilinear	0	
H09	Select starting characteristics (Auto search for idling motor's speed)		0: Disable 3: Enable (Follow RUN command, either forward or reverse) 4: Enable (Follow RUN command, both forward and reverse) 5: Enable (Follow RUN command, inversely both forward and reverse)	0	
H11	Deceleration mode		0: Normal deceleration 1: Coast-to-stop	0	
H12	Instantaneous overcurrent limiting		0: Disable 1: Enable	1	
H13	Restart mode after momentary power failure	Restart time	0.1 to 10.0 s	Depending on the inverter capacity	
H14		Frequency fall rate	0.00: Set deceleration time 0.01 to 100.0 Hz/s 999: Follow the current limit command	999	
H15		Continuous running level	200V series: 200 to 300VDC 400V series: 400 to 600VDC	235 V DC 470 V DC	
H16		Allowable momentary power failure time	0.0 to 30.0 s 999: The longest time automatically determined by the inverter	999	
H17	Select starting characteristics (Frequency for idling motor's speed)		0.0 to 120.0 Hz 999: Harmonize at the maximum frequency	999	
H26	PTC thermistor input	Mode selection	0: Disable 1: Enable (Upon detection of PTC, the inverter immediately trips and stops with OH4 displayed) 2: Enable (Upon detection of PTC, the inverter continues running while outputting alarm signal (THM))	0	
H27		Level	0.00 to 5.00 V DC	1.60 V DC	
H30	Communication link function (Mode selection)		Frequency command / RUN command 0: F01/C30 / F02 1: RS485 link / F02 2: F01/C30 / RS485 link 3: RS485 link / RS485 link 4: RS485 link (option) / F02 5: RS485 link (option) / RS485 link 6: F01/C30 / RS485 link (option) 7: RS485 link / RS485 link (option) 8: RS485 link (option) / RS485 link (option)	Set at factory shipping	0
H42	Capacitance of DC link bus capacitor		Indication for replacing DC link bus capacitor (0000 to FFFF: Hexadecimal)		
H43	Cumulative run time of cooling fan		Indication of cumulative run time of cooling fan for replacement		
H47	Initial capacitance of DC link bus capacitor		Indication for replacing DC link bus capacitor (0000 to FFFF: Hexadecimal)		
H48	Cumulative run time of capacitors on the printed circuit board		Indication for replacing capacitors on the printed circuit board (0000 to FFFF: Hexadecimal). Resetable		
H49	Select starting characteristics (Auto search time for idling motor's speed) Non-linear V/f pattern	0.0 to 10.0 s	0.0 s	0.0 Hz (22kW or below)	5.0 Hz (30kW or above)
H50		Frequency	0.0: Cancel 0.1 to 120.0 Hz		
H51			Voltage	0 to 240V: Output a voltage AVR-controlled (for 200V AC series) 0 to 500V: Output a voltage AVR-controlled (for 400V AC series)	0 (22kW or below) 20 (30kW or above, 200V ser.) 40 (30kW or above, 400V ser.)
H56	Deceleration time for forced stop		0.00 to 3600 s	20.0 s	
H61	UP/DOWN Control		1 or 3: Display data on the keypad´s LED monitor in decimal format (in each bit, “0” for disabled, “1” for enabled) Bit 0: Last UP/DOWN command value on releasing run command (Prefixed to “1”) Bit 1: Multistep Frequency + UP/DOWN Control	1 (Bit 0 = 1)	

Code	Name		Data setting range	Default setting	Actual setting
H63	Low limiter	Mode selection	0: Limit by F16 (Frequency Limiter: Low) and continue to run 1: If the output frequency lowers less than the one limited by F16 (Frequency limiter: Low), decelerates to stop the motor	0	
H64		Lower limiting frequency	0.0: Depends on F16 (Frequency limiter: Low) 0.1 to 60.0 Hz	2.0 Hz	
H69	Automatic deceleration		0: Disable 3: Enable (Control DC link bus voltage at a constant)	0	
H70	Overload prevention control		0.00: Follow deceleration time specified by F08 0.01 to 100.00 Hz/s 999: Disable	999	
H71	Deceleration characteristics		0: Disable 1: Enable	0	
H80	Gain for suppression of output current fluctuation for motor		0.00 to 0.40	0.10 for 45 kW or above (200V series) and for 55 kW or above (400V series) 0.20 for 37 kW or below (200V series) and for 45 kW or below (400V series)	
H86	Reserved *1		0 to 2	2 for 45 kW or above (200V series) and for 55 kW or above (400V series) 0 for 37 kW or below (200V series) and for 45 kW or below (400V series)	
H87	Reserved *1		25.0 to 120.0 Hz	25.0 Hz	
H88	Reserved *1		0 to 3 999	0	
H89	Reserved *1		0, 1	0	
H90	Reserved *1		0, 1	0	
H91	C1 signal disconnection detection		0.0 s: Wire disconnection protection disabled 0.1-60.0 s: Wire disconnection detection time	0.0 s	
H92	Continue to run	P component: gain	0.000 to 10.000 times 999	999	
H93		I component: time	0.010 to 10.000 s999	999	
H94	Cumulative run time of motor		Change or reset the cumulative data	-	
H95	DC braking (braking response mode)		0: Slow 1: Quick	1	
H96	STOP key priority/start check function		STOP key priority / Start check function 0: Disable / Disable 1: Enable / Disable 2: Disable / Enable 3: Enable / Enable	0	
H97	Clear alarm data		Setting H97 data to "1" clears alarm data and then returns to zero	0	
H98	Protection/maintenance function		0 to 63: Display data on the keypad's LED monitor in decimal format (In each bit, "0" for disabled, "1" for enabled)Bit 0: Lower the carrier frequency automatically Bit 1: Detect input phase loss Bit 2: Detect output phase loss Bit 3: Select life judgement criteria of DC link bus capacitor Bit 4: Judge the life of DC link bus capacitor Bit 5: Detect DC fan lock	19 (decimal) (Bits 4,1,0 = 1 bits 5,3,2, = 0)	

*1 The H86 through H90 are displayed, but they are reserved for particular manufacturers. Unless otherwise specified, do not access these function codes.

J codes: Application functions

Code	Name		Data setting range	Default setting	Actual setting
J01	PID control	Mode selection	0: Disable 1: Enable (normal operation) 2: Enable (inverse operation)	0	
J02		Remote process command	0: Enable arrow keys on keypad 1: PID process command 1 3: Enable terminal command UP/DOWN control 4: Command via communications link	0	
J03		P (gain)	0.000 to 30.000	0.100 times	
J04		I (integral time)	0.0 to 3600.0 s	0.0 s	
J05		D (differential time)	0.00 to 600.00 s	0.00 s	
J06		Feedback filter	0.0 to 900.0 s	0.5 s	
J10		Anti reset windup	0 to 200 %	200 %	
J11		Select alarm output	(Refer to FRENIC-Eco user's manual)	0	
J12		Upper limit alarm (AH)	0 to 100 %	100 %	
J13		Lower limit alarm (AL)	0 to 100 %	0 %	
J15		Stop frequency for slow flowrate	0: Disable 1 to 120 Hz	0	
J16		Slow flowrate level stop latency	1 to 60 s	30 s	
J17		Starting frequency	0: Disable 1 to 120 Hz	0	
J18		Upper limit of PID process output	1 to 120 Hz 999: Depends on setting of F15	999	
J19		Lower limit of PID process output	1 to 120 Hz 999: Depends on setting of F16	999	
J21	Dew condensation prevention (Duty)		1 to 50 %	1 %	
J22	Commercial power switching sequence		0: Keep inverter operation (Stop due to alarm) 1: Automatically switch to commercial-power operation	0	
J23	Starting from the Slow Flowrate Stop (Feedback deviation level)		0 to 100 %	0 %	
J24	Starting from the Slow Flowrate Stop (Start latency)		0 to 60 s	0	
J25	Pump control	Mode selection	0: Disable 1: Enable (Fixed inverter-driven motor) 2: Enable (Floating inverter-driven motor)	0	
J26	Motor 1 mode		0: Disable (Always OFF) 1: Enable 2: Force to run by commercial power	0	
J27	Motor 2 mode			0	
J28	Motor 3 mode			0	
J29	Motor 4 mode			0	
J30	Motor switching order		0: Fixed 1: Automatically (Constant run time)	0	
J31	Motor stop mode		0: Stop all motors (inverter-driven and commercial power-driven) 1: Stop inverter-driven motor only (excl. alarm state) 2: Stop inverter-driven motor only (incl. alarm state)	0	
J32	Periodic switching time for motor drive		0.0: Disable switching 0.1 to 720.0 h: Switching time range 999: Fix to 3 min	0.0 h	
J33	Periodic switching signaling period		0.00 to 600.00 s	0.10 s	
J34	Sequenced start of commercial power-driven motor	Frequency	0 to 120 Hz 999: Depends on setting of J18 (This code is used to judge whether or not to start a commercial power-driven motor by checking the output frequency of the inverter-driven motor)	999	
J35		Duration	0.00 to 3600 s	0.00 s	
J36	Sequenced stop of commercial power-driven motor	Frequency	0 to 120 Hz 999: Depends on setting of J19 (This code is used to judge whether or not to stop a commercial power-driven motor by checking the output frequency of the inverter-driven motor)	999	
J37		Duration	0.00 to 3600 s	0.00 s	
J38	Contactor delay time		0.01 to 2.00 s	0.10 s	
J39	Switching time for motor sequenced start (Deceleration time)		0.00: Depends on the setting of F08 0.01 to 3600 s	0.00 s	

Code	Name		Data setting range	Default setting	Actual setting
J40	Switching time for motor sequenced stop (Acceleration time)		0.00: Depends on the setting of F07 0.01 to 3600 s	0.00 s	
J41	Motor Unmount Switching Level		0 to 100 %	0 %	
J42	Switching motor sequenced start/sequenced stop (Dead band)		0.0: Disable 0.1 to 50.0 %	0.0 %	
J43	PID control startup frequency		0: Disable 1 to 120Hz 999: Depends on the setting of J36	999	
J44	Motor Mount Switching Level		0: Depends on the setting of J41 1 to 100 %	0 %	
J45	Signal assignment to: (for relay output card)	[Y1 A/B/C]	Selecting function code data assigns the corresponding function to terminals [Y1A/B/C], [Y2A/B/C] and [Y3A/B/C]	100	
J46		[Y2 A/B/C]		100	
J47		[Y3 A/B/C]	100: Depends on the setting of E20 to E22 60 (1060): Sequenced start motor 1, inverter-driven (M1_I) 61 (1061): Sequenced start motor 1, commercial power-driven (M1_L) 62 (1062): Sequenced start motor 2, inverter-driven (M2_I) 63 (1063): Sequenced start motor 2, commercial power-driven (M2_L) 64 (1064): Sequenced start motor 3, inverter-driven (M3_I) 65 (1065): Sequenced start motor 3, commercial power-driven (M3_L) 67 (1067): Sequenced start motor 4, commercial power-driven (M4_L) 68 (1068): Periodic switching early warning (MCHG) 69 (1069): Pump control limit signal (MLIM)	100	
J48	Cumulative run time of motor	Motor 0	Indication of cumulative run time of motor for replacement	---	
J49		Motor 1		---	
J50		Motor 2		---	
J51		Motor 3		---	
J52		Motor 4		---	
J53	Maximum cumulative number of relay ON times	Y1 A/B/C to Y3 A/B/C	Indication of maximum number of ON times of relay contacts on the relay output card or those built in inverter. Display of 1.000 means 1.000 times For relay output card For built-in mechanical contacts	---	
J54		[Y1], [Y2], [Y3]		---	
J55		[Y5A/C], [30A/B/C]		---	
J93	PID Start Frequency (Mount)		0: Depends on the setting of J36 1 to 120 Hz	0 Hz	
J94	PID Start Frequency (Unmount)		0: Depends on the setting of J34 1 to 120 Hz	0 Hz	

y codes: Link functions

Code	Name		Data setting range	Default setting	Actual setting
y01	RS485 communication (standard)	Station address	1 to 255	1	
y02		Communications error processing	0: Immediately trip with alarm Er8 1: Trip with alarm Er8 after running for the period specified by timer y03 2: Retry during the period specified by timer y03. If retry fails, trip and alarm Er8. If it succeeds, continue to run 3: Continue to run	0	
y03		Error processing timer	0.0 to 60.0 s	2.0 s	
y04		Transmission speed	0: 2400 bps 1: 4800 bps 2: 9600 bps 3: 19200 bps 4: 38400 bps	3	
y05		Data length	0: 8 bits 1: 7 bits	0	
y06		Parity check	0: None 1: Even parity 2: Odd parity	0	
y07		Stop bits	0: 2 bits 1: 1 bit	0	
y08		No-response error detection time	0 (No detection) 1 to 60 s	0	
y09		Response latency time	0.00 to 1.00 s	0.01 s	
y10		Protocol selection	0: Modbus RTU protocol 1: FRENIC Loader protocol (SX protocol) 2: Fuji general-purpose inverter protocol 3: Metasys-N2	1	
y11	RS485 communication (option)	Station address	1 to 255	1	
y12		Communications error processing	0: Immediately trip with alarm ErP 1: Trip with alarm ErP after running for the period specified by timer y13 2: Retry during the period specified by timer y13. If retry fails, trip and alarm ErP. If it succeeds, continue to run 3: Continue to run	0	
y13		Error processing timer	0.0 to 60.0 s	2.0 s	
y14		Transmission speed	0: 2400 bps 1: 4800 bps 2: 9600 bps 3: 19200 bps 4: 38400 bps	3	
y15		Data length	0: 8 bits 1: 7 bits	0	
y16		Parity check	0: None 1: Even parity 2: Odd parity	0	
y17		Stop bits	0: 2 bits 1: 1 bit	0	
y18		No-response error detection time	0 (No detection) 1 to 60 s	0	
y19		Response latency time	0.00 to 1.00 s	0.01 s	
y20		Protocol selection	0: Modbus RTU protocol 2: Fuji general-purpose inverter protocol 3: Metasys-N2	0	
y98	Bus link function (Mode selection)	Frequency command 0: Follow H30 data 1: Via field bus option 2: Follow H30 data 3: Via field bus option	RUN command Follow H30 data Follow H30 data Via field bus option Via field bus option	0	
y99	Loader link function (Mode selection)	Frequency command 0: Follow H30 and Y98 data 1: Via RS485 link (Loader) 2: Follow H30 and Y98 data 3: Via RS485 link (Loader)	RUN command Follow H30 and Y98 data Follow H30 and Y98 data Via RS485 link (Loader) Via RS485 link (Loader)	0	

6.2 Application examples

6.2.1 Line-Inverter changeover

Following there is an example describing how to switch a motor from commercial-power operation to inverter-operation (and vice versa) using an internal automatic switch sequence called ISW50 function.

Components needed to develop this application:

- Motor (pump or fan motor)
- 3 relays (the relays will be connected to 3 contactors)
- 1 thermal relay (optional)
- FRENIC-Eco inverter (FRN-F1)

⚠ WARNING
When the primary contactor SW52-1 is opened the inverter will not be powered on. Therefore, and in order to keep the inverter control circuit alive, an auxiliary input voltage is needed from R0/T0 auxiliary input terminals.

Circuit diagram and configuration:

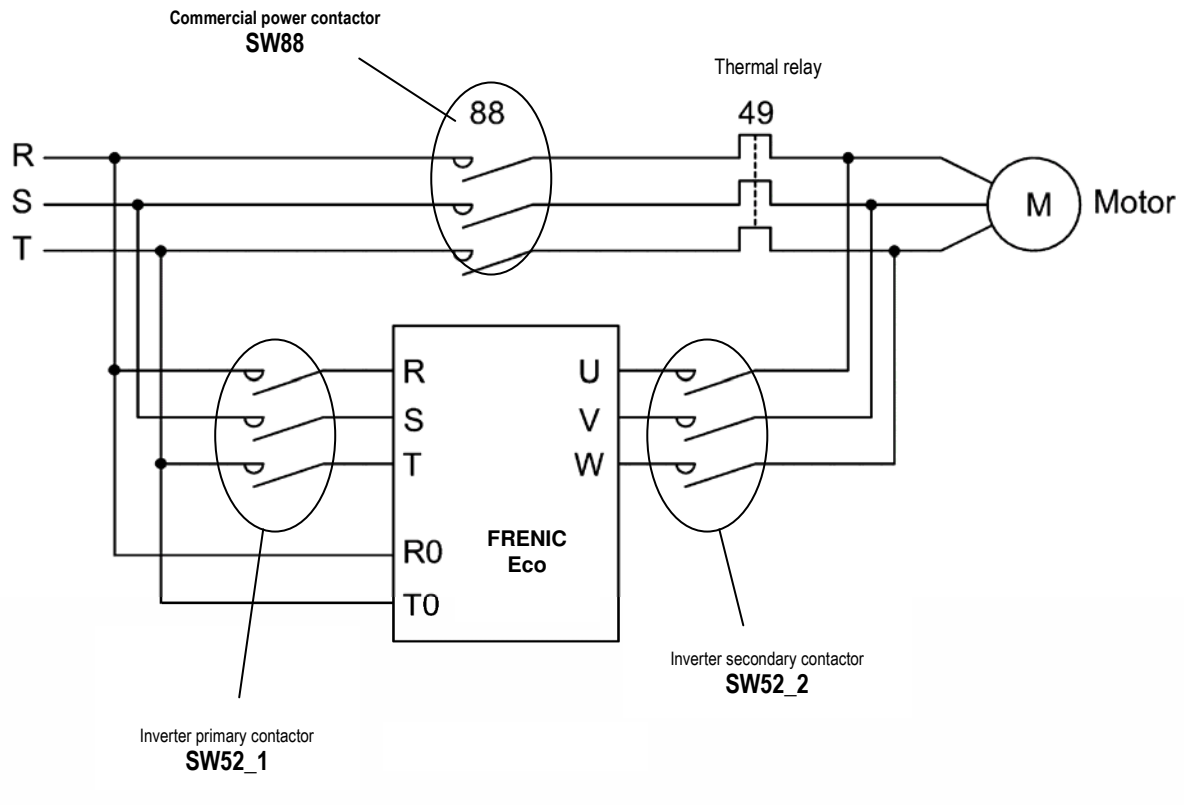

Configuration of control circuit:

To switch the motor from inverter operation to commercial-power operation or vice versa the inverter ISW50 function will be used.

1. DIGITAL INPUTS (in this case FWD, X1 and are used)

- FWD: digital input set as FWD function (RUN command).
- X1: digital input set as mutistep frequency SS1 function (speed).
- X2: digital input set as ISW50 function (to switch the motor).

2. DIGITAL OUTPUTS (in this case Y1, Y2 and Y3 are used)

- Y1: digital output set as SW52-1 function (this digital output will be connected to relay 1. Relay 1 will open or close the primary contactor SW52-1).
- Y2: digital output set as SW52-2 function (this digital output will be connected to relay 2. Relay 2 will open or close the secondary contactor SW52-2).
- Y3: digital output set as SW88 function (this digital output will be connected to relay 3. Relay 3 will open or close the commercial power contactor SW88)

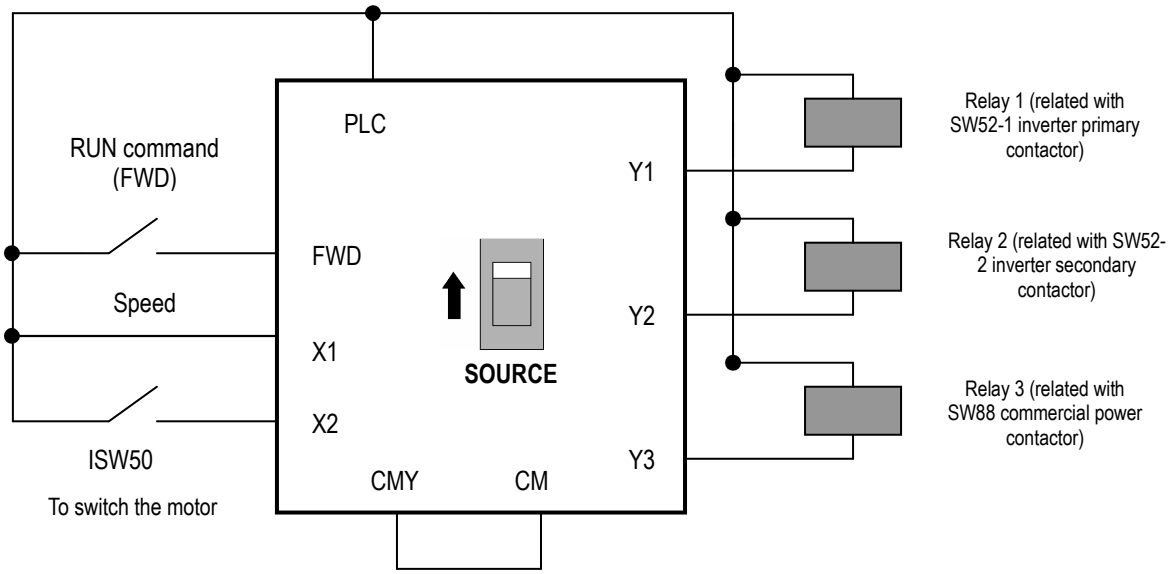

Switching sequence:

1. INVERTER OPERATION ------> COMMERCIAL POWER OPERATION

If the digital input set as ISW50 function is changed from ON to OFF.....
(1) The inverter output is shut off immediately (IGBT off).
(2) The inverter primary contactor (SW52-1) and the inverter secondary contactor (SW52-2) are opened immediately.
(3) If the RUN command is kept during t1 time (H13 + 0.2 seconds), the commercial power contactor SW88 is closed and the motor is switched to commercial power operation.

2. COMMERCIAL POWER OPERATION ------> INVERTER OPERATION

If the digital input set as ISW50 function is changed from OFF to ON.....
(1) The primary contactor SW52-1 is closed immediately giving voltage to the inverter (inverter is powered).
(2) The commercial power contactor SW88 is opened immediately (disconnecting the motor from the line).
(3) After t2 time (time required for the inverter main circuit to get ready + 0.2 s) the inverter secondary contactor SW52-2 is immediately closed.
(4) After t3 time (H13 + 0.2 s), the inverter starts driving and the motor is inverter controlled up to the desired frequency.

Timing scheme:

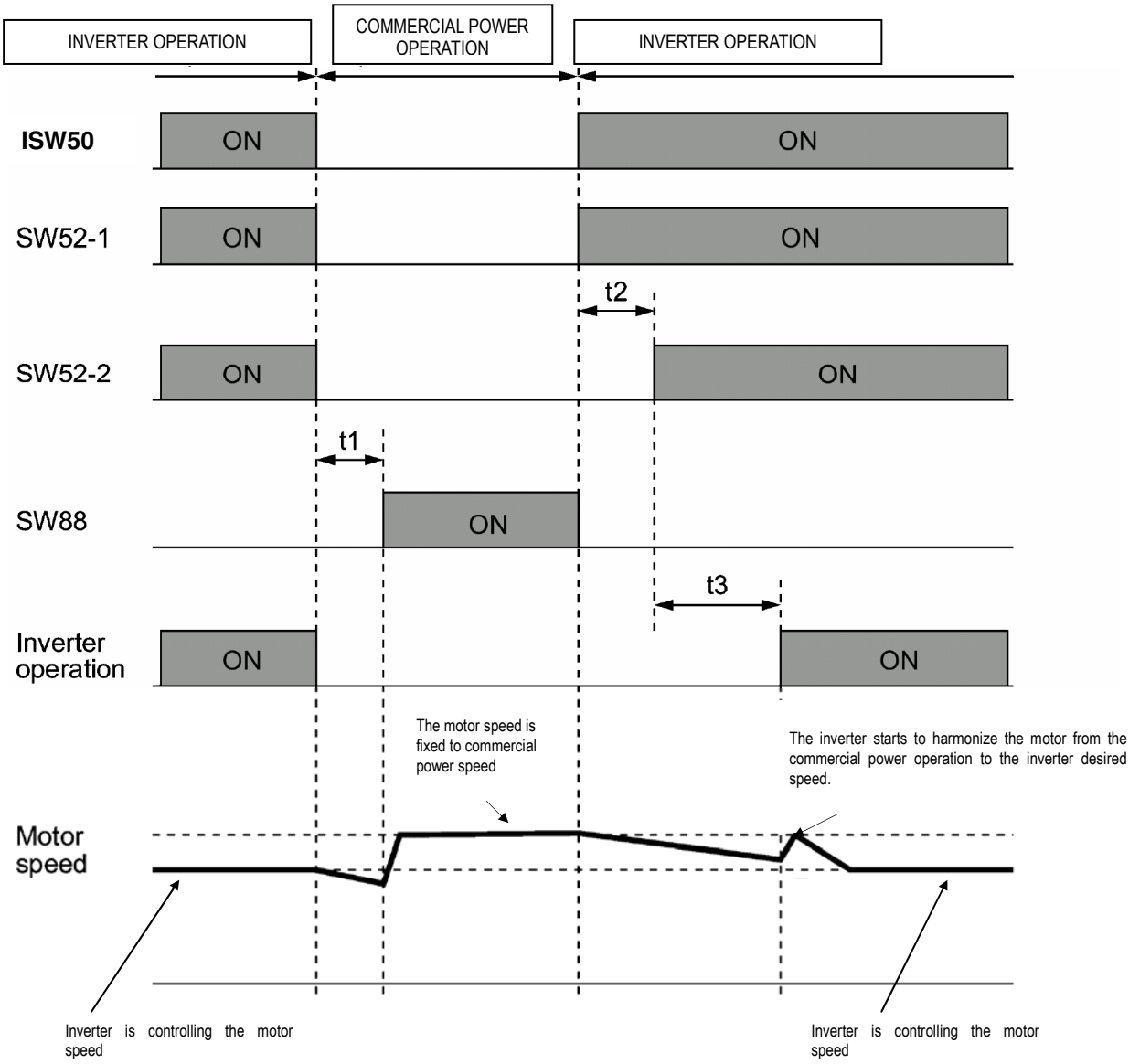

The function codes which have been modified are:

Code	Data	Description
F02	1	RUN command using terminals (digital inputs)
F03	*motor data*	Maximum frequency
F04	*motor data*	Base frequency
F05	*motor data*	Rated voltage
F07	15 s *(for instance)*	Acceleration time
F08	15 s *(for instance)*	Deceleration time
E01	0	SS1 multistep frequency function assigned to X1 terminal (digital input)
E02	40	Switching sequence command ISW50 assigned to X2 terminal (digital input)
E20	12	SW52-1 function assigned to Y1 terminal (digital output)
E21	13	SW52-2 function assigned to Y2 terminal (digital output)
E22	11	SW88 function assigned to Y3 terminal (digital output)
E46	1	Language selection (English language selected)
C05	10 Hz *(for instance)*	If X1 terminal is ON, C05 speed will be selected
P01	*motor data*	Number of motor poles
P02	*motor data*	Motor capacity
P03	*motor data*	Motor rated current
P06	*motor data*	Motor no load current (for instance 50% of P03). If autotuning mode 2 is done, P06 is auto calculated.
H13	2 seconds	Restart time

6.2.2 Select Multistep Frequencies (7 different set point frequencies)

To use Multistep Frequencies you have to program E01 to E05 to SS1 (0), SS2 (1) or SS4 (2) functions.
Switching digital input signals (programmed to SS1, SS2 and SS4 functions) ON/OFF will switch the frequency command to those defined by function codes C05 through C11 (multistep frequencies). With this, the inverter may drive the motor at 8 different set point frequencies.

The table below lists the frequencies that can be obtained by the combination of switching (SS1), (SS2), and (SS4). In the "Selected frequency" column, "Other than multistep frequency" represents the set frequencies defined by frequency command 1 (F01), frequency command 2 (C30), or others.

(SS4)	(SS2)	(SS1)	Selected frequency
OFF	OFF	OFF	Other than multistep frequency
OFF	OFF	ON	C05 (multistep frequency 1)
OFF	ON	OFF	C06 (multistep frequency 2)
OFF	ON	ON	C07 (multistep frequency 3)
ON	OFF	OFF	C08 (multistep frequency 4)
ON	OFF	ON	C09 (multistep frequency 5)
ON	ON	OFF	C10 (multistep frequency 6)
ON	ON	ON	C11 (multistep frequency 7)

6.2.3 PID Controller

In order to set up the PID controller the following parameters have to be set:

J01. PID control (mode select).
This function is used to setup the operation mode of the PID controller. The alternatives are:

0 PID inactive
1 PID active, forward operation
2 PID active, reverse operation

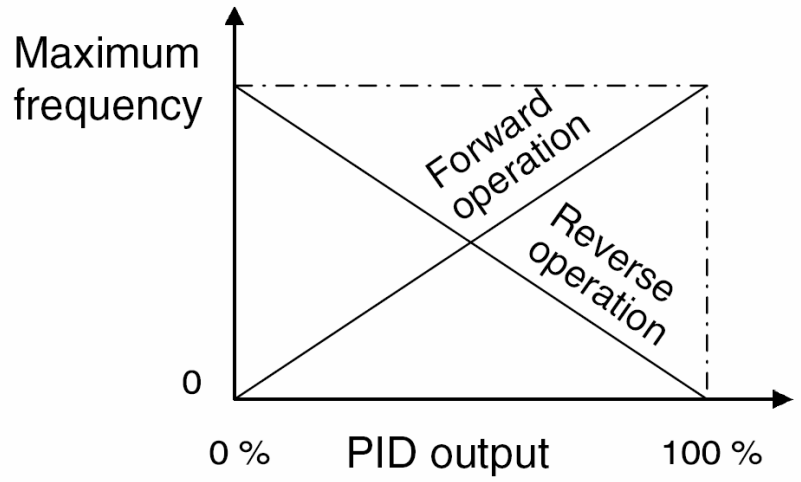

J02. Remote process command.
This parameter is used to set the source of the Set Value for the PID Controller.

0 Enable set by Keypad
1 PID process command 1
3 Enable terminal command (up)/(down) control
4 Command via communication link

When setting J02 to 1, you have to specify the source of this command. In order to do so you have to program one of the following functions to 3 (PID process command 1):

E61 to 3 when using terminal 12 (0 to 10V DC)
E62 to 3 when using terminal C1 (4 to 20mA)
E63 to 3 when using terminal V2 (0 to 10 V DC)

The second signal that we have to set is the source of the PID Feedback. This also will be done using the functions mentioned above, depending on the kind of feedback signal that the inverter receives from the sensor:

E61 to 5 when using terminal 12 (0 to 10V DC)
E62 to 5 when using terminal C1 (4 to 20 mA)
E63 to 5 when using terminal V2 (0 to 10V DC)

Note: if these functions are set up with the same data, the operation priority is given in the following order E61 > E62 > E63.

J03. PID control (P-gain).
This parameter is used to set the proportional (P) gain of the PID controller.
This parameter has to be tuned on site; the value depends on the application.

J04. PID control (I-time).
This function is used to set the integral (I) time of the PID controller.
This function has to be tuned on site; the value depends on the application.

J05. PID control (D-time).
This function is used to set the derivative (D) time of the PID controller.
This function has to be tuned on site; the value depends on the application.

J06. PID control (Feedback filter).
This function is used to set the time constant of the filter for PID control feedback signal, in seconds.
This function has to be tuned on site; the value depends on the application.

The following 3 functions are especially designed for pump applications.
These function codes specify the data for the slow flowrate stop in pump control, a feature that stops the inverter when there is no water consumption.

Slow flowrate stop function

When the discharge pressure has increased, decreasing the reference frequency (output of the PID processor) below the stop frequency for slow flowrate level (J15) for more than the elapsed stopping time on slow flowrate level stop latency (J16), the inverter decelerates to stop, while PID control itself continues to operate. When the discharge pressure decreases, increasing the reference frequency (output of the PID processor) above the starting frequency (J17), the inverter resumes operation.
If we need to have a signal indicating the state in which the inverter is stopped due to the slow flowrate stop feature, we have to assign PID-STP function (Inverter stopping due to slow flowrate under PID control) to one of the general-purpose output terminal (function code data = 44).

J15. PID Control (Stop frequency for slow flowrate).
Specifies the frequency which triggers a slow flowrate stop of the inverter.

J16. PID Control (Slow flowrate level stop latency).
Specifies the elapsed time from when the inverter stops operation due to slow flowrate level condition.

J17. PID Control (Starting frequency).
Specifies the starting frequency. Select a frequency higher than the slow flowrate level stop frequency. If the specified starting frequency is lower than the slow flowrate level stop frequency, the later stop frequency is ignored; the slow flowrate level stop is triggered when the output of the PID processor drops below the specified starting frequency.

For Example: Set-point set by keypad and feedback from a transducer (transmitter) connected in current input C1 (figure 2), forward operation.

F02=0 (Start-Stop: keypad, FWD/REV button)
F07=1.0 (Acceleration time 1)
F08=1.0 (Deceleration time 1)

E40=7.00 (7 bar max)
E41=0.00 (0 bar min)
E43=10 (PID set-point value)

PID parameters:

J01=1 (PID active, forward operation)
J02=0 (PID set value from keypad)
E62=5 (PID feedback value by current input C1)

J03 (PID control P-gain)
J04 (PID control I-gain)
J05 (PID control D-gain)
J06 (PID control Feedback filter)

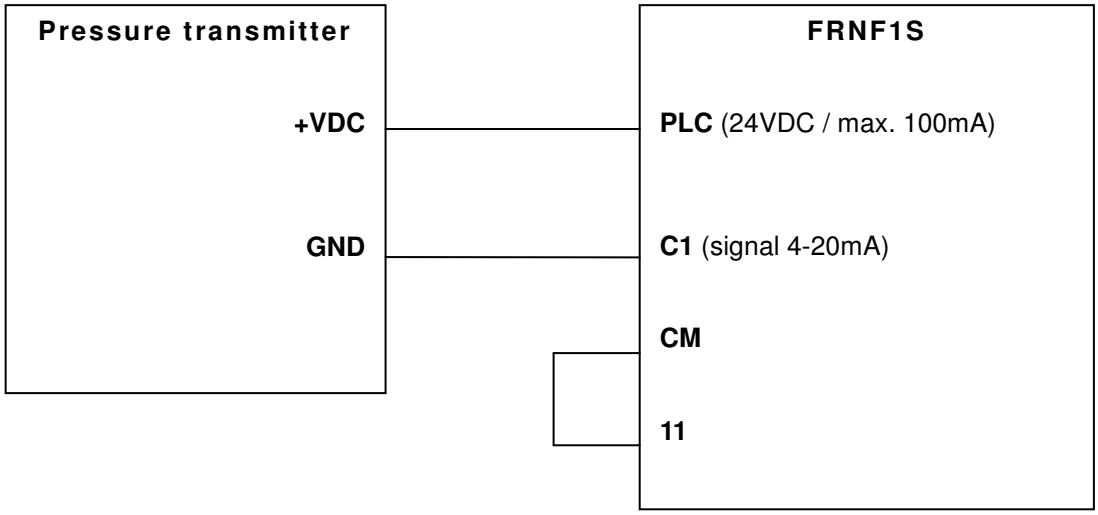

7. TROUBLESHOOTING

Alarm code	Alarm Name	Alarm contents
OC1	Overcurrent during acceleration	The inverter output current has exceeded the overcurrent level. Possible causes: short-circuit in the output phase, F09 too large, ground faults, EMC noise, acceleration/deceleration times are too short or motor load is too heavy.
OC2	Overcurrent during deceleration	
OC3	Overcurrent at constant speed	
EF	Ground fault (90kW or above)	A ground fault current flowed from the inverter output to the ground.
OU1	Overvoltage during acceleration	The internal DC-Voltage has exceeded the overvoltage level. Possible causes: the input voltage is too high, the braking load is too high or the deceleration time is too short.
OU2	Overvoltage during deceleration	
OU3	Overvoltage at constant speed	
LU	Undervoltage	The DC voltage is below the undervoltage level.
Lin	Input phase loss	The unbalance between the input phases is too big.
OPL	Output phase loss	One output phase is not connected or has no load.
OH1	Heat sink overheat	The temperature of the heat sink has exceeded the alarm level.
OH2	Alarm issued by an external device	THR external failure. Check the external device which is connected to the inverter.
OH3	Inside of the inverter overheat	The temperature inside the inverter has exceeded the alarm level.
OH4	Motor protection (PTC thermistor)	PTC failure. Probably the motor temperature is too high.
FUS	Fuse blown (90kW or above)	The fuse inside the inverter is blown.
PbF	Charger circuit fault (55kW or above)	The magnetic contactor (MC) failed. This MC is inside the inverter and short-circuits the charging resistor.
OL1	Electronic thermal overload relay	Inverter detects an overload of the connected motor (related function codes F10 to F12).
OLU	Inverter overload	The temperature inside the inverter is too high or the load is too heavy.
Er1	Memory error	An error occurred while writing data to inverter memory.
Er2	Keypad communications error	Communication error between the remote keypad and the inverter.
Er3	CPU error	The CPU is not working properly.
Er4	Option board communications error	Communication error between the option board and the inverter. Refer to the option manual.
Er5	Option board error	An error has been detected by the option board. Refer to the option manual.
Er6	Incorrect operation error	Check setting of H96.
Er7	Autotuning error	Auto-tuning failed (check motor connections, motor parameters, check if main contactors are being closed properly and check if there is a BX or BBX functions assigned to a ON level digital input).
Er8	RS485 communications error	A communication error occurred during RS485 communication.
ErF	Data saving error during undervoltage	The inverter was not able to save the frequency command and PID process command set by the keypad when the power was cut off.
ErP	RS485 communications error (option board)	A communication error occurred during RS485 communication through the RS485 option board.
ErH	Power PCB error (55kW or above)	Failure caused by an internal inverter board.

For further information about alarm codes please refer to the FRENIC-Eco user's manual.

8. SPECIFICATIONS AND EXTERNAL DIMENSIONS

8.1 IP20 / IP00 specifications

Item			Specifications													
Type (FRN_ _ _ F1S-4E)			0.75	1.5	2.2	4.0	5.5	7.5	11	15	18.5	22	30	37	45	55
Nominal applied motor (kW)		*1	0.75	1.5	2.2	4.0	5.5	7.5	11	15	18.5	22	30	37	45	55
Output ratings	Rated capacity (kVA)	*2	1,9	2,8	4,1	6,8	9,5	12	17	22	28	33	44	54	64	80
	Rated voltage (V)	*3	Three-phase, 380, 400 V/50 Hz, 380, 400, 440, 460 V/60 Hz (with AVR function)													
	Rated current (A)	*4	2.5	3.7	5.5	9.0	12.5	16.5	23	30	37	44	59	72	85	105
	Overload capability		120 % of rated current for 1min													
	Rated frequency		50, 60 Hz													
Input ratings	Phases, voltage, frequency: Main power supply		Three-phase, 380 to 480V, 50/60Hz										Three-phase, 380 to 440 V/50 Hz Three-phase, 380 to 480 V/60 Hz			
	Phases, voltage, frequency: Auxiliary control power input		Single-phase, 380 to 480V, 50/60Hz										Single-phase, 380 to 440 V/50 Hz Single-phase, 380 to 480 V/60 Hz			
	Phases, voltage, frequency: Auxiliary fan power input	*5	None													*10
	Voltage/frequency allowance		Voltage: +10 to -15% (Voltage unbalance: 2% or less) *9, Frequency: +5 to -5%													
	Rated current (A) *6	(with DCR)	1.6	3.0	4.5	7.5	10.6	14.4	21.1	28.8	35.5	42.2	57.0	68.5	83.2	102
		(without DCR)	3.1	5.9	8.2	13.0	17.3	23.2	33.0	43.8	52.3	60.6	77.9	94.3	114	140
	Required power supply capacity (kVA)	*7	1.2	2.2	3.1	5.3	7.4	10	15	20	25	30	40	48	58	71
Braking	Torque (%)	*8	20										10 to 15			
	DC braking		Starting frequency: 0.0 to 60.0 Hz, Braking time: 0.0 to 30.0 s, Braking level: 0 to 60%													
DC reactor (DCR)			Option													
Applicable safety standards			UL508C, C22.2 No. 14, EN50178 :1997 (Applying)													
Enclosure (IEC60529)			IP20, UL open type										IP00, UL open type			
Cooling method			Natural cooling		Fan cooling											
Mass (kg)			3.1	3.2	3.3	3.4	3.4	5.8	6	6.9	9.4	9.9	11,5	23	24	33

Item			Specifications													
Type (FRN_ _ _ F1S-4A)			75	90	110	132	160	200	220	280	315	355	400	450	500	560
Nominal applied motor (kW)		*1	75	90	110	132	160	200	220	280	315	355	400	450	500	560
Output ratings	Rated capacity (kVA)	*2	105	128	154	182	221	274	316	396	445	495	563	640	731	792
	Rated voltage (V)	*3	Three-phase, 380 to 480V (with AVR function)													
	Rated current (A)	*4	139	168	203	240	290	360	415	520	585	650	740	840	960	1040
	Overload capability		120 % of rated current for 1min													
	Rated frequency		50, 60 Hz													
Input ratings	Phases, voltage, frequency: Main power supply		Three-phase, 380 to 440V, 50Hz or Three-phase, 380 to 480V, 60Hz													
	Phases, voltage, frequency: Auxiliary control power Input		Single-phase, 380 bis 480V, 50/60Hz													
	Phases, voltage, frequency: Auxiliary fan power Input	*9	Single-phase, 380 to 440V/50Hz Single pahse, 380 to 480V/60Hz													
	Voltage/frequency variations		Voltage: +10 to -15% (Voltage unbalance: 2% or less) *7, Frequency: +5 to -5%													
	Rated current (A) *8	(with DCR)	138	164	201	238	286	357	390	500	559	628	705	789	881	990
		(without DCR)	—	—	—	—	—	—	—	—	—	—	—	—	—	—
	Required power supply capacity(kVA)	*5	96	114	140	165	199	248	271	347	388	435	489	547	611	686
Braking	Torque (%)	*6	10 to 15													
	DC Injection braking		Starting frequency: 0.0 to 60.0Hz, Braking time: 0.0 to 30.0s, Braking level: 0 to 60%													
DC reactor (DCR)			Option													
Applicable safety standards			UL508C, C22.2 No. 14, EN50178 :1997 (Applying)													
Enclosure (IEC60529)			IP20, UL open type													
Cooling method			Fan cooling													
Mass (kg)			34	42	45	63	67	96	98	162	165	282	286	355	360	360

*1 Fuji 4-pole standard motor
*2 Rated capacity is calculated by assuming the output rated voltage as 440V for three-phase 400 V series.
*3 Output voltage cannot exceed the power supply voltage.
*4 An excessively low setting of the carrier frequency may result in the higher motor temperature or tripping of the inverter by its overcurrent limiter setting. Lower the continuous load or maximum load instead. (When setting the carrier frequency (F26) to 1kHz, reduce the load to 80% of its rating.)
*5 Obtained when a DC reactor (DCR) is used.
*6 Average braking torque (Varies with the efficiency of the motor.)

*7 Voltage unbalance (%) = $\frac{\text{Max. voltage (V) - Min. voltage (V)}}{\text{Three-phase average voltage (V)}}$ x 67 (IEC61800-3)

If this value is 2 to 3%, use an AC reactor (ACR option).
*8 Trial calculation done on assumption that the power capacity is 500kVA (or 10 times the inverter capacity if the inverter capacity is larger than 50 kVA) and the Inverter is connected to the power supply of %X=5%.
*9 Use [R1, T1] terminals for driving AC cooling fans of an Inverter powered by the DC link bus, such as by a high power factor PWM converter. (In ordinary operation, the terminals are not used.)
*10 Bingle-phase, 380 to 440V/50Hz or Bingle-phase, 380 to 480V/60Hz

8.2 IP54 specifications

Item		Specifications															
Type (FRN___F1L-4E)		0.75	1.5	2.2	3.7	5.5	7.5	11	15	18.5	22	30	37	45	55	75	90
Nominal applied motor [kW] *1)		0.75	1.5	2.2	3.7	5.5	7.5	11	15	18.5	22	30	37	45	55	75	90
Output ratings	Rated capacity [kVA] *2)	1.9	2.8	4.1	6.8	9.5	12	17	22	28	33	44	54	64	77	105	128
	Rated voltage [V] *3)	Three-phase 380V,400V/50Hz, 380V,400V,440V,460V/60Hz (With AVR function)															
	Rated current [A] *4)	2.5	3.7	5.5	9.0	12.5	16.5	23	30	37	44	59	72	85	105	139	168
	Overload capability	120% of rated current for 1min															
	Rated frequency	50, 60Hz															
Input ratings	Main power supply	Three-phase,380 to 480V,50/60Hz											Three-phase, 380 to 440V/50Hz 380 to 480V/60Hz				
	Auxiliary control power input	Single-phase,380 to 480V,50/60Hz											Single-phase, 380 to 440V/50Hz 380 to 480V/60Hz				
	Auxiliary power input for the fans *9)	-											Single-phase, 380 to 440V/50Hz 380 to 480V/60Hz				
	Voltage/frequency variations	Voltage: +10 to -15% (Voltage unbalance: 2% or less *8)), Frequency: +5 to -5%															
	Rated current [A] *5)	1.6	3.0	4.5	7.5	10.6	14.4	21.1	28.8	35.5	42.2	57.0	68.5	83.2	102	138	164
	Required power supply capacity [kVA] *6)	1.2	2.2	3.1	5.3	7.4	10	15	20	25	30	40	48	58	71	96	114
Braking	Torque *7) [%]	20										10 to 15					
	DC injection braking	Starting frequency: 0.0 to 60.0Hz, Braking time: 0.0 to 30.0s, Braking level: 0 to 60%															
EMC filter		Standard conformance: Immunity: 2nd Env. (EN61800-3: 1996+A11:2000) Emission: Class A Group 1 (EN55011: 1998+A1: 1999+A2: 2002)															
DC REACTOR (DCRE)		Input power factor : 86% or more at 100% load(Output Rating)															
KEY PAD		Multifunctional Keypad (TP-G1W)															
Applicable safety standards		EN50178:1997															
Enclosure		IP54(IEC60529) / UL TYPE 12(UL50)															
Cooling method		Natural cooling		Fan cooling													
Weight / Mass [kg]		12.5	12.5	13	14	14	22	22	24	34	35	40	54	56	74	76	86

*1) Fuji's 4-pole standard motor.
*2) Rated capacity is calculated by regarding the output rated voltage as440V for three-phase 400V series.
*3) Output voltage cannot exceed the power supply voltage.
*4) Motor temperature gets higher or current limit function of the inverter is easy to operate if carrier frequency is set to low. Continuous or peak load shall be reduced to avoid high motor temperature or current limit operation. When setting the carrier frequency (F26) to 1 kHz or below, reduce the load to 80% of rated load or below for use.
*5) Calculated under Fuji-specified conditions.
*6) Obtained when a DC reactor (DCRE) is used.
*7) Average braking torque without optional braking resistor (varies with the efficiency of the motor).

*8) $\text{Voltage unbalance} = \frac{\text{Max. voltage [V]} \quad \text{Min. voltage [V]}}{\text{Three - phase average voltage [V]}} \times 67\%$ (IEC61800 3(5.2.3))

If this value is 2 to 3%, use an AC reactor (ACR).
*9) Normally no need to be connected. Use these terminals when the inverter is used with a power regenerative PWM converter (e.g. RHC series).

8.3 External dimensions

8.3.1 IP20 / IP00 external dimensions

FRN0.75F1S-4 to FRN5.5F1S-4 Units expressed in mm

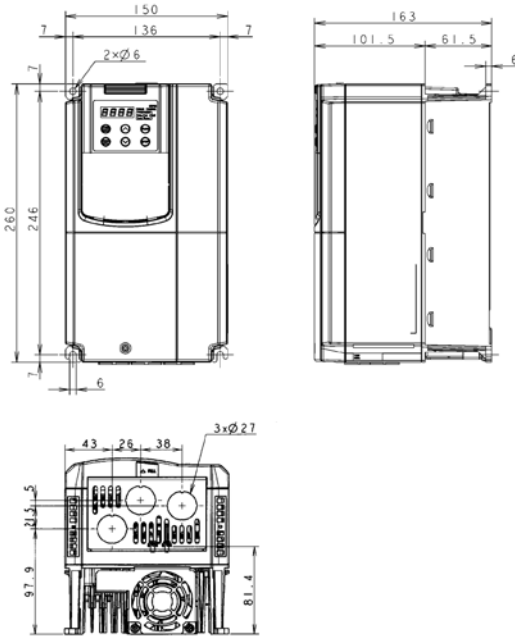

FRN7.5F1S-4 to FRN30F1S-4 Units expressed in mm

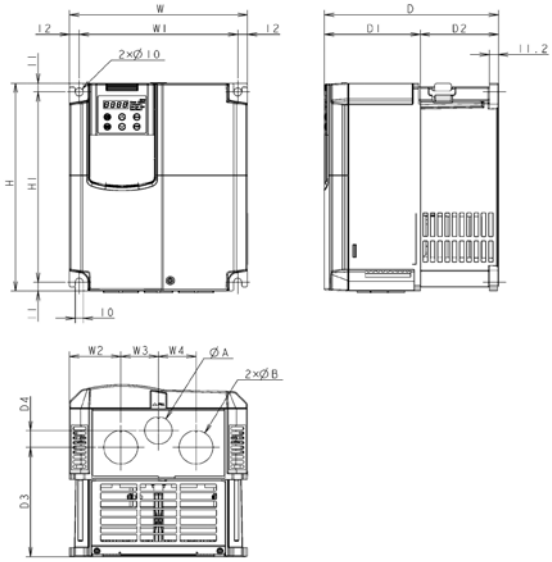

Power supply voltage	Type	Dimensions [mm]													
		W	W1	W2	W3	W4	H	H1	D	D1	D2	D3	D4	ØA	ØB
Three-phase 400V	FRN7.5F1S-4E	220	196	63,5	46,5	46,5	260	238	215	118,5	96,5	141,7	16	27	34
	FRN11F1S-4E														
	FRN15F1S-4E											136,7	21	34	42
	FRN18.5F1S-4E	250	226	67	58	58	400	378		85	130	166,2	2		
	FRN22F1S-4E														
	FRN30F1S-4E			-	- -							-	-	-	

FRN37F1S-4 to FRN560F1S-4 Units expressed in mm

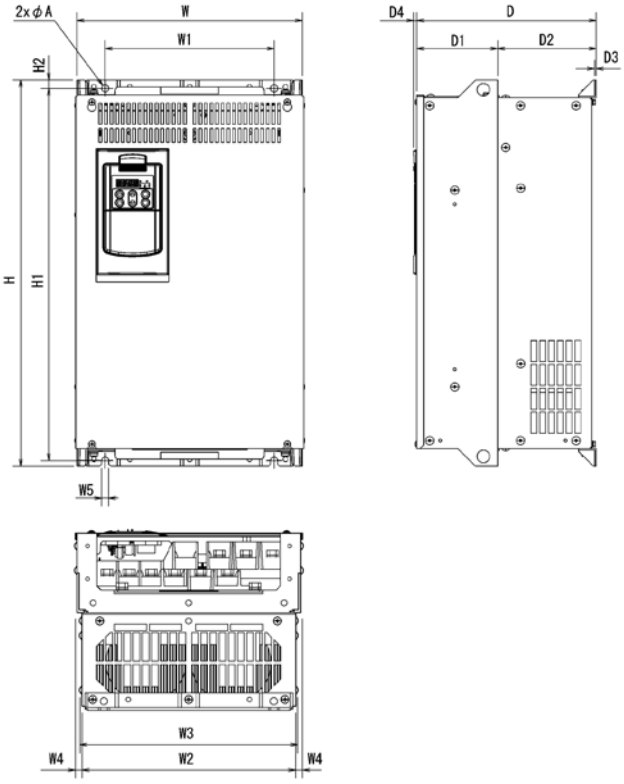

Power supply voltage	Type	Dimensions [mm]														
		W	W1	W2	W3	W4	W5	H	H1	H2	D	D1	D2	D3	D4	ØA
Three-phase 400 V	FRN37F1S-4E	320	240	304	310,2	8	10	550	530	12	255	115	140	4	4,5	10
	FRN45F1S-4E															
	FRN55F1S-4E	355	275	339	345,2						270		155			
	FRN75F1S-4E							615	595							
	FRN90F1S-4E							740	720		300	145			6	
	FRN110F1S-4E															
	FRN132F1S-4E	530	430	503	509,2	13,5	15		710	15,5	315	135	180			15
	FRN160F1S-4E										360	180				
	FRN200F1S-4E							1000	970							
	FRN220F1S-4E															
	FRN280F1S-4E	680	580	653	659						380	200		6,4		
	FRN315F1S-4E															
	FRN355F1S-4E							1400	1370		440	160				
	FRN400F1S-4E															
	FRN450F1S-4E	880	780	853	859											
	FRN500F1S-4E															
	FRN560F1S-4E															

8.3.2 IP54 dimensions

Units expressed in mm

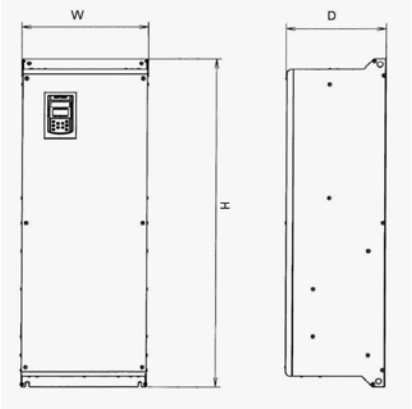

Power supply voltage	Inverter type	W	H	D
Three phase 200V	FRN0.75F1L-2E	210	500	225
	FRN1.5 F1L-2E			
	FRN2.2 F1L-2E			
	FRN3.7 F1L-2E			
	FRN5.5 F1L-2E			
	FRN7.5F1L-2E	300	600	280
	FRN11F1L-2E			
	FRN15F1L-2E			
	FRN18.5F1L-2E	350	800	320
	FRN22F1L-2E			
	FRN30F1L-2E			
	FRN37F1L-2E	400	1100	
	FRN45F1L-2E	450	1280	360
Three phase 400V	FRN0.75F1L-4E	210	500	225
	FRN1.5F1L-4E			
	FRN2.2F1L-4E			
	FRN3.7F1L-4E			
	FRN5.5F1L-4E			
	FRN7.5F1L-4E	300	600	280
	FRN11F1L-4E			
	FRN15F1L-4E			
	FRN18.5F1L-4E	350	800	320
	FRN22F1L-4E			
	FRN30F1L-4E			
	FRN37F1L-4E	400	1100	
	FRN45F1L-4E			
	FRN55F1L-4E	450	1170	350
	FRN75F1L-4E			
	FRN90F1L-4E	450	1280	360

8.3.3 Keypad dimensions TP-E1 Units expressed in mm

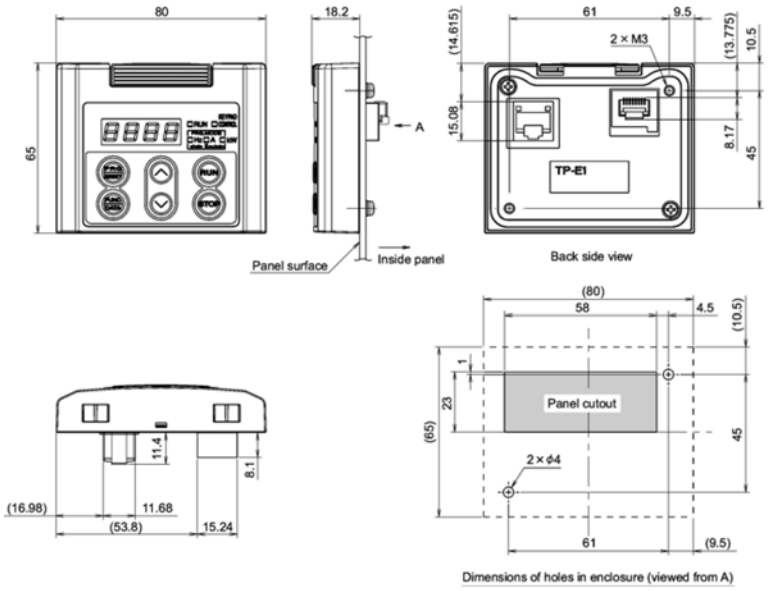

8.3.4 Keypad dimensions TP-G1 Units expressed in mm

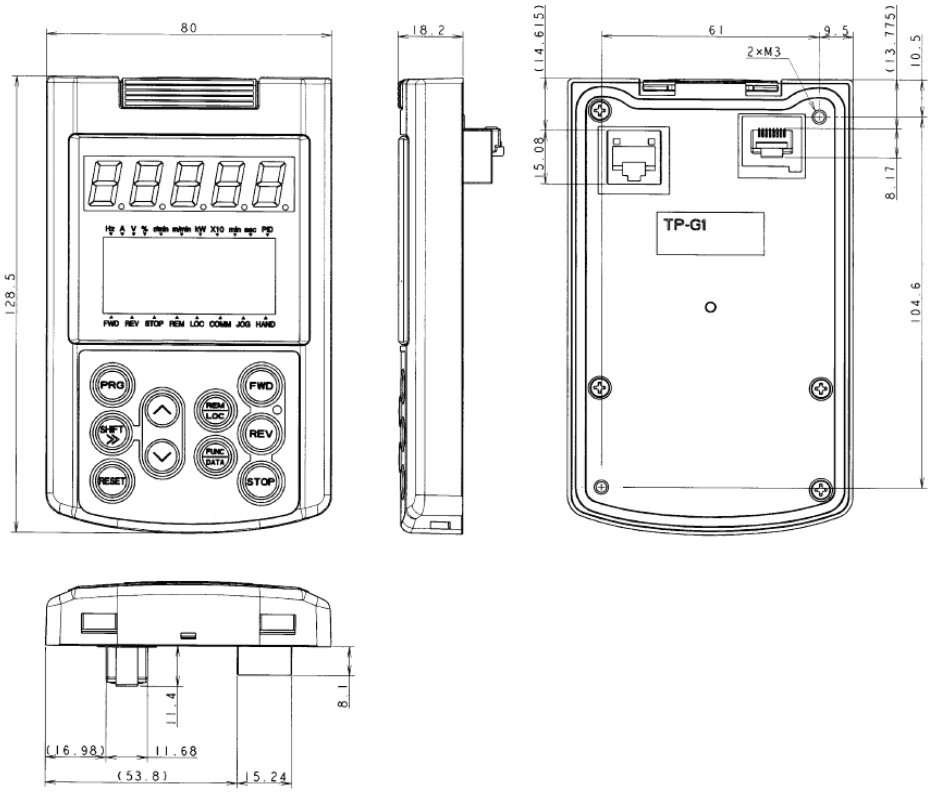

8.3.5 Dimensions DC Reactors

DC Reactors type	Induc-tivity	Rated-current	Connection type	Protection class	Loss	Weight	Isolation-	B	T	T1	H	L1	L3	d1	d2	d2	Drawing
	mH	A		IP	W	ca. kg	class	mm	mm	mm	mm	mm	mm	mm	mm²	mm	Nr.
DCRE4-0.4	50	1,5	Clamp	IP00	6,6	0,5	T50/B	60	64	50	65	44	36	3,6x7	2,5		1
DCRE4-0.75	30	2,5	Clamp	IP00	8	0,7	T50/B	66	76	56	70	50	40	4,8x9	2,5		1
DCRE4-1.5	16	4	Clamp	IP00	11,4	1,2	T50/B	66	87	66	70	50	51	4,8x9	2,5		1
DCRE4-2.2	12	5,5	Clamp	IP00	13	1,4	T50/B	78	72	60	80	56	44	4,8x9	2,5		1
DCRE4-4.0	7	9	Clamp	IP00	16	2,1	T50/B	84	96	73.5	86	64	62	4,8x9	2,5		1
DCRE4-5.5	4	13	Clamp	IP00	14,7	2,1	T50/B	84	96	73.5	86	64	62	4,8x9	2,5		1
DCRE4-7.5	3,5	18	Clamp	IP00	25,5	4,5	T50/B	96	110	99.7	95	84	83	5,8X11	2,5		1
DCRE4-11	2,2	25	Clamp	IP00	23	4,5	T50/B	96	110	99.7	95	84	83	5,8X11	4		1
DCRE4-15	1,8	34	Clamp	IP00	27	6	T50/B	120	125	98	115	90	81	5,8X11	10		1
DCRE4-18.5 KL	1,4	41	Clamp	IP00	31	6	T50/B	120	150	98	134	90	81	5,8X11	10		1
DCRE4-18.5 KS	1,4	41	Lug	IP00	31	6	T50/B	120	150	98	105	90	81	5,8X11		5,5	2
DCRE4-22A KL	1,2	49	Clamp	IP00	33	8,4	T50/B	120	170	118	134	90	91	5,8X11	10		1
DCRE4-22A KS	1,2	49	Lug	IP00	33	8,4	T50/B	120	170	118	105	90	91	5,8X11		5,5	2
DCRE4-30B KL	0,86	80	Clamp	IP00	85	10,2	T50/B	150	185	126	200	122	103	7x13	35		3
DCRE4-30B KS	0,86	80	Lug	IP00	85	10,2	T50/B	150	185	126	135	122	103	7x13		10	2
DCRE4-37B KL	0,7	100	Clamp	IP00	100	13,6	T50/B	150	220	132	210	122	131	7x13	50		3
DCRE4-37B KS	0,7	100	Lug	IP00	100	13,6	T50/B	150	255	132	135	122	131	7x13		10	2
DCRE4-45B KL	0,58	120	Clamp	IP00	90	13,6	T50/F	150	225	152	210	122	131	7x13	50		3
DCRE4-45B KS	0,58	120	Lug	IP00	90	13,6	T50/F	150	225	152	135	122	131	7x13		10	2
DCRE4-55B KL	0,47	146	Clamp	IP00	109	17	T50/F	174	215	130	235	155	130	7x13	50		3
DCRE4-55B KS	0,47	146	Lug	IP00	109	17	T50/F	174	215	130	155	155	130	7x13		12	2

Drawing 1

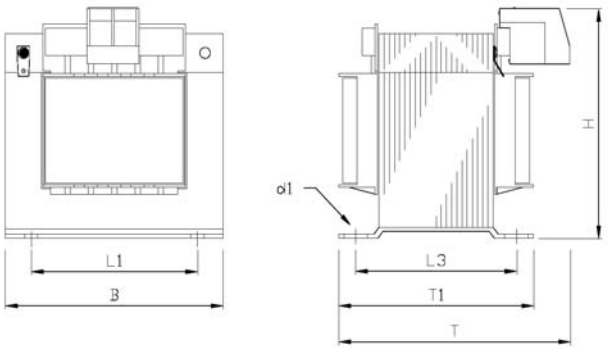

Drawing 2

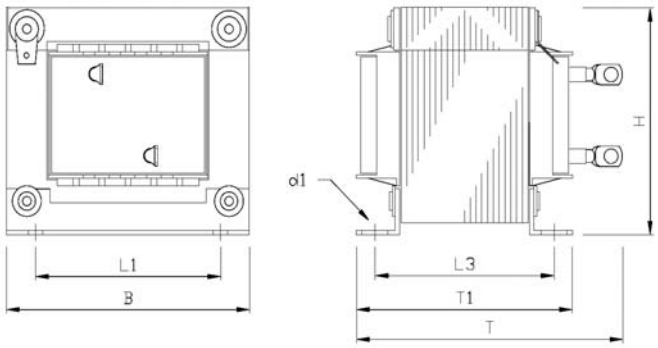

Drawing 3

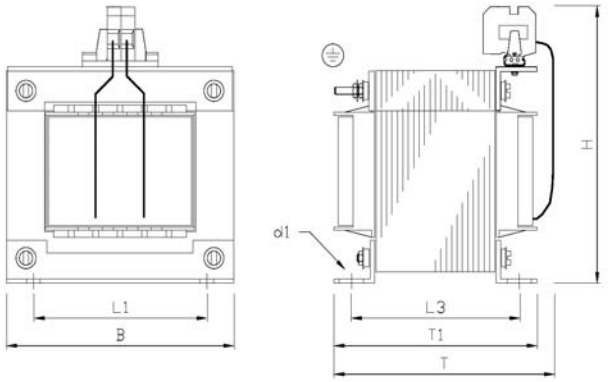

DC Reactors type	W	W1	D	D1	D2	D3	H	Mounting hole	Terminal hole	Mass KG	Drawing
DCR4-75C	255± 10	225	106± 2	88±1	125	53±1	145	6	M10	12.4	4
DCR4-90C	258± 10	225	116± 2	98±1	130	58±1	145	6	M12	14.7	4
DCR4-110C	308± 10	265	118± 4	90±2	140	58±2	155	8	M12	18.4	4
DCR4-132C	308± 10	265	126± 4	100±2	150	63±2	180	8	M12	22	4
DCR4-160C	357± 10	310	131± 4	103±2	160	65.5±2	190	10	M12	25.5	4
DCR4-200C	357± 10	310	141±4	113±2	165	70.5±2	190	10	M12	29.5	4
DCR4-220C	357± 10	310	146± 4	118±2	185	73±2	190	10	M12	32.5	4
DCR4-280C	350± 10	310	161± 4	133	210	80.5±2	190	M10	M16	38	4
DCR4-315C	400± 10	345	146± 4	118	200	73±2	225	M10	M16	40	4
DCR4-355C	400± 10	345	156± 4	128±2	200	78±2	225	M10	-	47	5
DCR4-400C	445± 10	385	145± 4	117	213	72.5±2	245	M10	-	52	5
DCR4-450C	440± 10	385	150± 4	122±2	215	75±2	245	M10	-	60	5
DCR4-500C	445± 10	390	165± 4	137±2	220	82.5±2	245	M10	-	70	5
DCR4-560C	270	145	208	170	200	-	480	Ø14 LONG HOLE	Ø15	70	6

Drawing 4

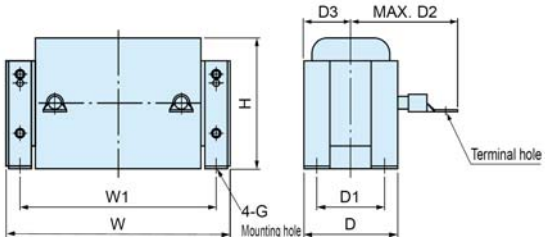

Drawing 5

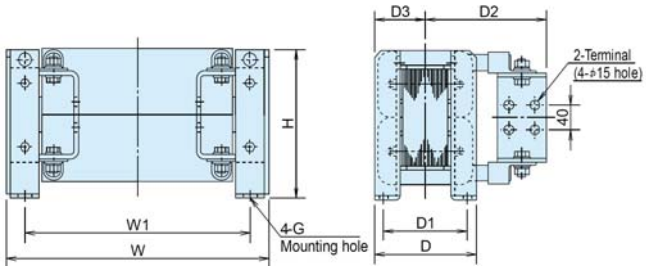

Drawing 6

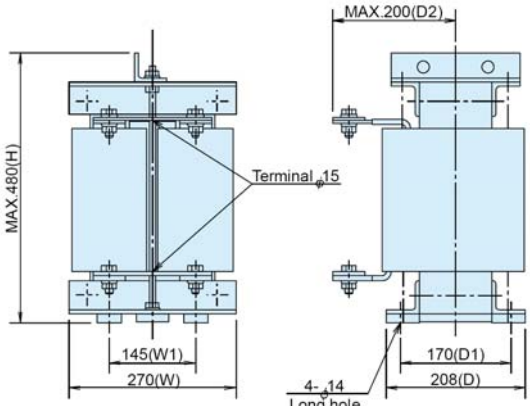

8.3.6 Dimensions EMC input filters

Units expressed in mm

FS5536 – 12 – 07

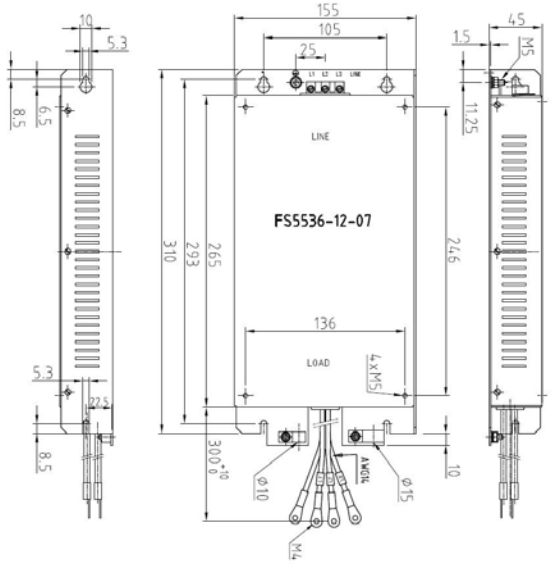

FS21312 – 18 – 07

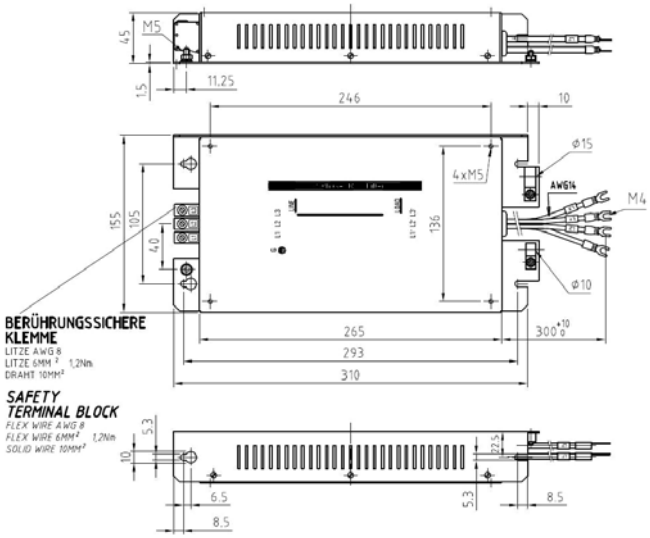

FS5536 – 35 – 07

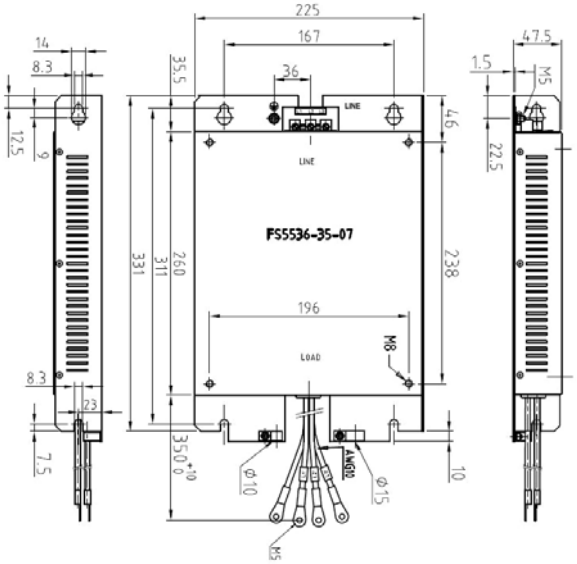

FS21312 – 44 – 07

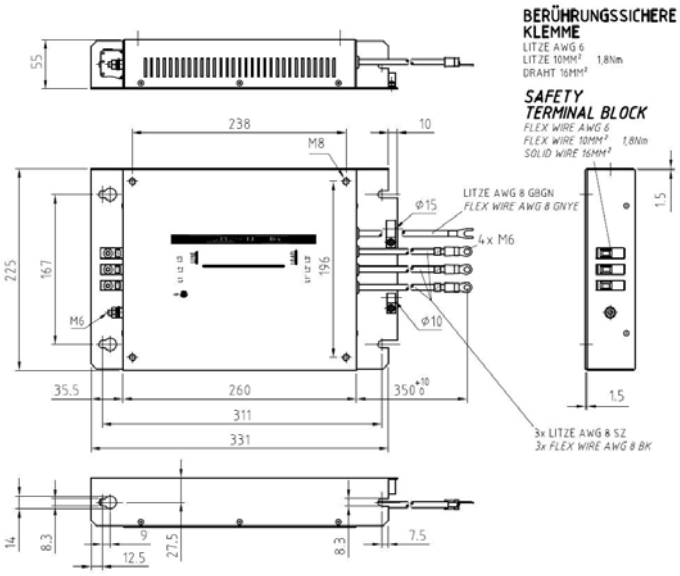

FS5536 – 50 – 07

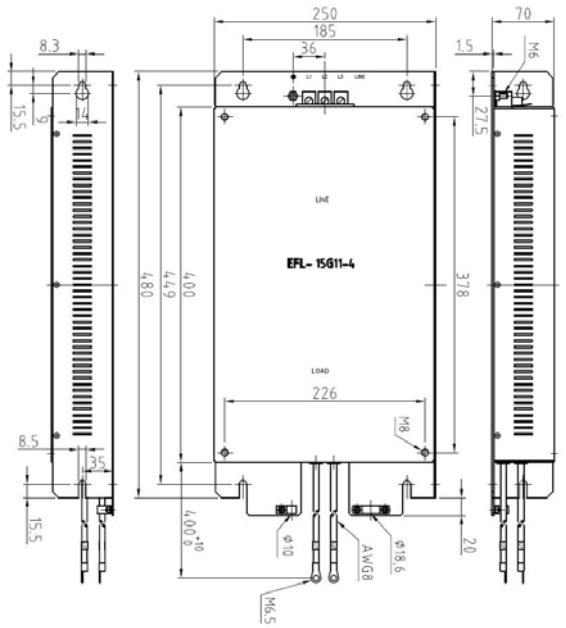

FS21312 – 78 – 07

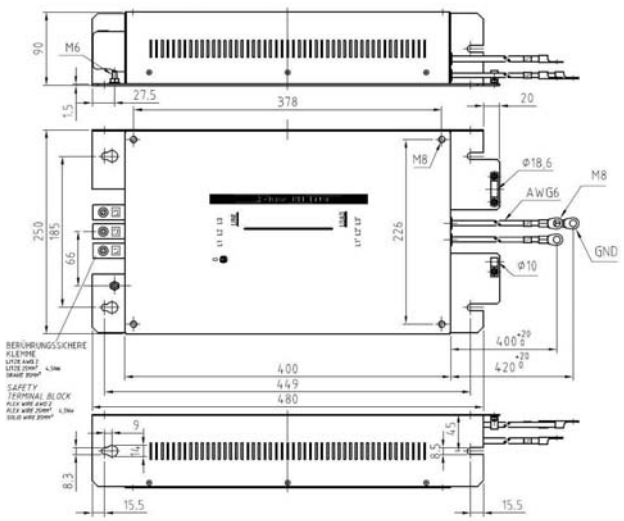

FS5536 – 100 – 35

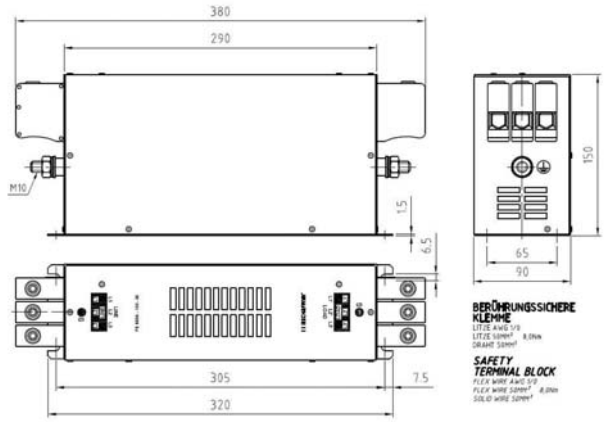

FS5536 – 180 – 40

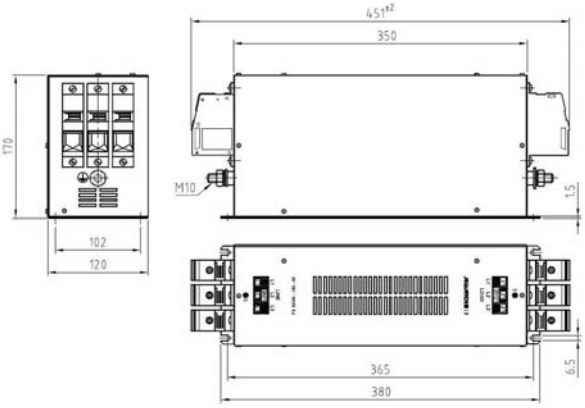

FS5536 – 250 – 99

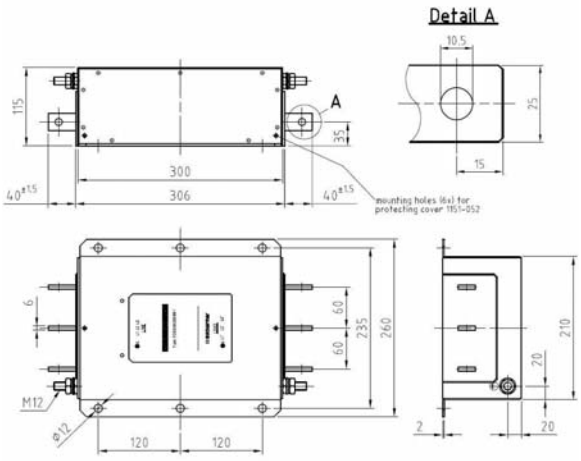

FS5536 – 400 – 99

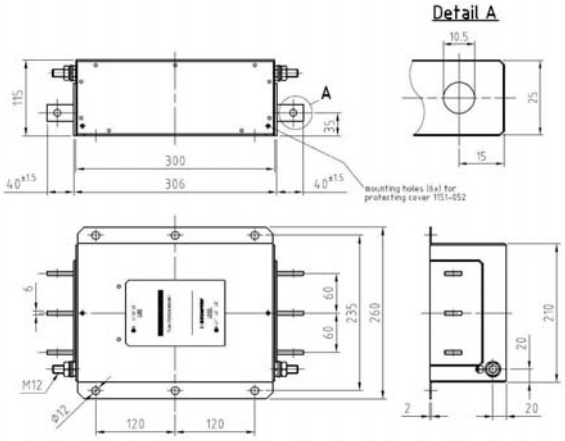

FN3359

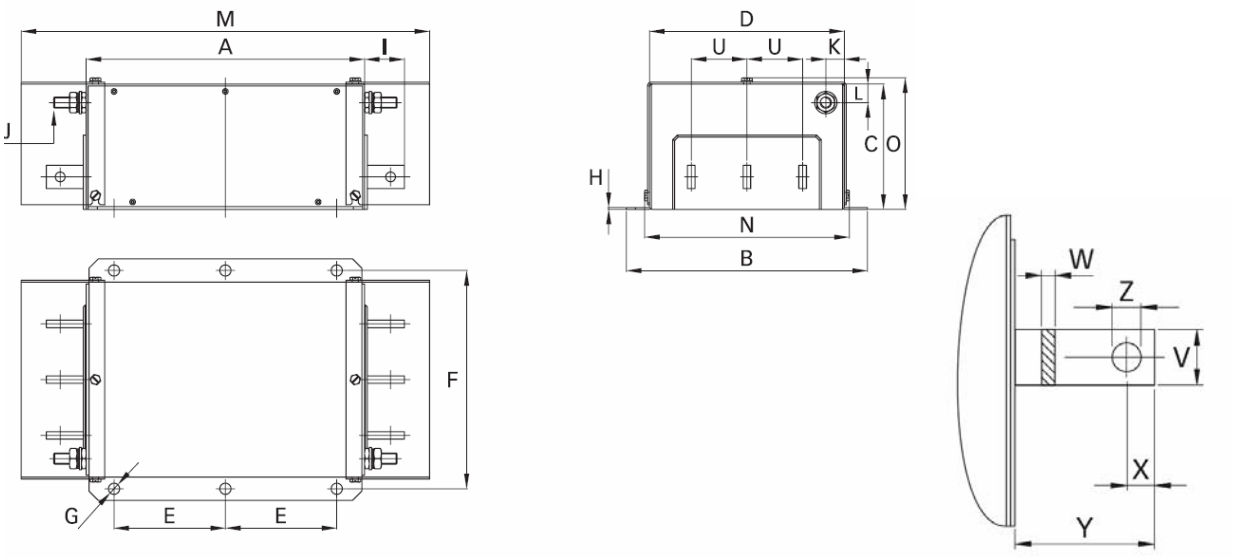

Dimensions [mm]	FN3359 – 600 – 99	FN3359 – 800 – 99	FN3359 – 1000 – 99
A	300	350	350
B	260	280	280
C	135	170	170
D	210	230	230
E	120	145	145
F	235	255	255
G	Ø12	Ø12	Ø12
H	2	3	3
I	43	53	53
J	M12	M12	M12
K	20	25	25
L	20	25	25
M	440	510	510
N	221	241	241
O	142	177	177
U	60	60	60
W	25	40	40
X	15	20	20
Y	40	50	50
Z	Ø10.5	Ø14	Ø14

9. OPTIONS

9.1 Options table

Option name		Function and application
Main options	DC reactor (DCRE)	The DC reactor is used to reduce harmonic components on the input current (mains supply) of the inverter. Note: DO NOT FORGET to remove the DC bar between P1 and P(+) before installing this option.
	Output filter(OFLE)	Install an output filter between the inverter and the motor to: 1) Suppress the voltage fluctuation at the motor input terminals. 2) Reduce leakage current from the motor power cable (motor supply), due to harmonic components. 3) Reduce emission and induction noise generated from the motor power cable. Note: When using an OFLE, set the switching frequency of the inverter (function code F26) within the allowable range specified by the filter manufacturer, otherwise the filter will overheat.
	Ferrite ring reactors (ACL)	The ferrite ring reactors are used to reduce radiated emissions from the inverter.
	EMC input filter	The EMC input filter is used to make the inverter to conform to European EMC directives.
	AC reactor (ACRE)	The AC reactor is connected to the inverter input (mains supply) when the inter-phase voltage unbalance of the AC mains is between 2% and 3%. $\text{Inter - phase voltage unbalance} = \frac{\text{Max. voltage (V)} - \text{Min. voltage (V)}}{\text{3 phase average voltage (V)}} \times 67$
Operation and communication options	Multi-function keypad (TP-G1) 	Allows the user to monitor the status of the inverter (voltage, output current, input power,…), as well as to set parameters values in a conversational mode (6 languages available). It is able to store three complete inverter function sets. It includes a Liquid Crystal Display.
	Extension cable for keypad (CB-..S)	The extension cable allows to connect the keypad to the inverter remotely. Three lengths are available: 5 m (CB-5S), 3 m (CB-3S) y 1 m (CB-1S).
	RS485 Communications card (OPC-F1-RS)	This card adds an additional communications port to the inverter that allows to connect a PLC or PC.
	DeviceNet interface card (OPC-F1-DEV)	This card is used to communicate the inverter to a DeviceNet master unit.
	ProfiBus DP interface card (OPC-F1-PDP)	This card is used to communicate the inverter to a ProfiBus DP master unit.
	LonWorks interface card (OPC-F1-LNW)	This card is used to communicate the inverter to a LonWorks master unit
	Relay output card (OPC-F1-RY)	This card is used to add three relay outputs to the inverter.
	Loader software	PC software, Windows GUI (Graphics user interface) based that allows to set inverter function values more easily. Also allows to upload/download all the function values to/from a file.
	Attachment for external cooling (PB-F1)	With this adapter you can install the inverter in the panel in such a way that the heatsink is outside of the cabinet. Available for inverters for capacities of 30 kW or below.
	Panel-Mount adapter (MA-F1)	Use this adapter when installing the FRENIC-Eco by using the mounting holes of the already installed inverter (FRENIC5000P11S, 5.5 to 37KW).

9.2 EMC input filter

The following table describes the EMC input filter and the EMC compliance level for each inverter capacity.

	Inverter model	EMC input filter	Compliance level
Three phase 400 V supply	FRN0,75F1S-4E	FS5536-12-07	C1 conducted (20m, 15kHz); C1 radiated (25m, 15kHz)
	FRN1,5F1S-4E	FS5536-12-07	
	FRN2,2F1S-4E	FS5536-12-07	
	FRN4,0F1S-4E	FS5536-12-07	
	FRN5,5F1S-4E	FS21312-18-07	
	FRN7,5F1S-4E	FS5536-35-07	
	FRN11F1S-4E	FS5536-35-07	
	FRN15F1S-4E	FS21312-44-07	
	FRN18,5F1S-4E	FS5536-50-07	C1 conducted (20m, 15kHz); C2 radiated (25m, 15kHz)
	FRN22F1S-4E	FS21312-78-07	
	FRN30F1S-4E	FS21312-78-07	
	FRN37F1S-4E	FS5536-100-35	C2 conducted (10m, 10kHz); C2 radiated (10m, 10kHz)
	FRN45F1S-4E	FS5536-180-40	
	FRN55F1S-4E	FS5536-180-40	
	FRN75F1S-4E	FS5536-180-40	
	FRN90F1S-4E	FS5536-180-40	
	FRN110F1S-4E	FS5536-250-99	
	FRN132F1S-4E	FS5536-250-99	
	FRN160F1S-4E	FS5536-400-99-1	
	FRN200F1S-4E	FS5536-400-99-1	
	FRN220F1S-4E	FS5536-400-99-1	
	FRN280F1S-4E	FN3359-600-99	C3 conducted (100m, 6kHz); C2 radiated (100m, 6kHz)
	FRN315F1S-4E	FN3359-600-99	
	FRN355F1S-4E	FN3359-800-99	
	FRN400F1S-4E	FN3359-800-99	
	FRN450F1S-4E	FN3359-800-99	
	FRN500F1S-4E	FN3359-1000-99	
	FRN560F1S-4E	FN3359-1000-99	

9.3 DC reactor

The following table describes the recommended standard DC reactors for each inverter model.

	Inverter model	Standard DC reactors
Three phase 400 V supply	FRN0,75F1S-4E	DCRE4-0,75
	FRN1,5F1S-4E	DCRE4-1,5
	FRN2,2F1S-4E	DCRE4-2,2
	FRN4,0F1S-4E	DCRE4-4,0
	FRN5,5F1S-4E	DCRE4-5,5
	FRN7,5F1S-4E	DCRE4-7,5
	FRN11F1S-4E	DCRE4-11
	FRN15F1S-4E	DCRE4-15
	FRN18,5F1S-4E	DCRE4-18,5
	FRN22F1S-4E	DCRE4-22A
	FRN30F1S-4E	DCRE4-30B
	FRN37F1S-4E	DCRE4-37B
	FRN45F1S-4E	DCRE4-45B
	FRN55F1S-4E	DCRE4-55B

CONTACT INFORMATION

Headquarters Europe

Fuji Electric FA Europe GmbH
Goethering 58
63067 Offenbach/Main
Germany
Tel.: +49 (0)69 669029 0
Fax: +49 (0)69 669029 58
info_inverter@fujielectric.de
www.fujielectric.de

Headquarters Japan

Fuji Electric Systems Co., Ltd..
Gate City Ohsaki East Tower,
11-2 Osaki 1-chome, Shinagawa-ku,
Tokyo 141-0032
Japan
Tel.: +81-3-5435-7280
Fax: +81-3-5435-7425
www.fesys.co.jp

Germany

Fuji Electric FA Europe GmbH
Sales area South
Drosselweg 3
72666 Neckartailfingen
Tel.: +49 (0)7127 9228 00
Fax: +49 (0)7127 9228 01
hgneiting@fujielectric.de

Fuji Electric FA Europe GmbH
Sales area North
Friedrich-Ebert-Str. 19
35325 Mücke
Tel.: +49 (0)6400 9518 14
Fax: +49 (0)6400 9518 22
mrost@fujielectric.de

Switzerland

Fuji Electric FA Schweiz
ParkAltenrhein
9423 Altenrhein
Tel.: +41 71 85829 49
Fax.: +41 71 85829 40
info@fujielectric.ch
www.fujielectric.ch

Spain

Fuji Electric FA España
Ronda Can Fatjó 5, Edifici D, Local B
Parc Tecnològic del Vallès
08290 Cerdanyola (Barcelona)
Tel.: +34 93 5824333/5
Fax: +34 93 5824344
infospain@fujielectric.de