INDUSTRIAL ELECTRONICS

KOSTAL

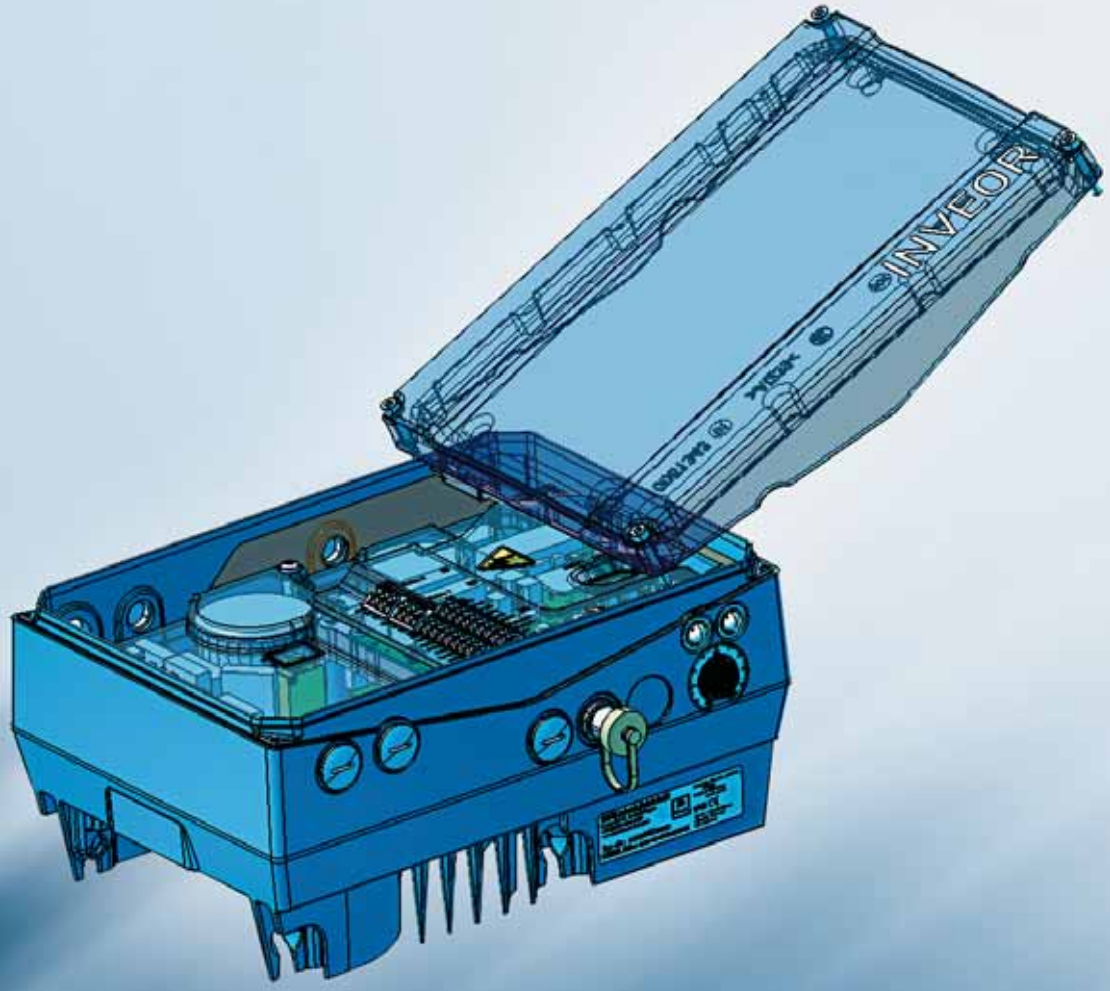

Smart connections.

Operating manual INVEOR

LEGAL NOTICE

KOSTAL Industrie Elektrik GmbH
An der Bellmerei 10
58513 Lüdenscheid
Germany
Phone: +49 (0)2351 16-0
Fax: +49 (0)2351 16-2400
E-mail: info-industrie@kostal.com

Exclusion of liability

All general names, trade names, product names or other designations used in this manual may be legally protected even if not labelled as such (e.g. as a trademark). KOSTAL assumes no liability for their free usage.

The illustrations and texts have been compiled with great care. Nevertheless, the possibility of errors cannot be ruled out and we cannot guarantee that the text is free of errors.

General note on equality

KOSTAL's publishers are aware of the importance of language with regard to the gender equality and always make an effort to reflect this in their documentation. Using gender-neutral formulations throughout, however, made the text hard to read. For this reason, the masculine form has been used as a rule.

Table of contents

Overview of sizes

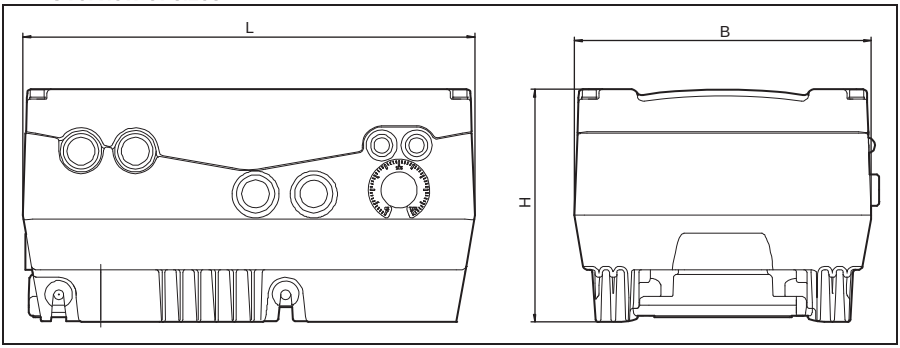

Dimensional drawings

The drive controls are available in the following performance classes with the specified size names.

Size INVEOR motor integrated	MA	MB	MC	MD
Recommended motor power [kW]	0.55 / 0.75 / 1.1 / 1.5	2.2 / 3.0 / 4.0	5.5 / 7.5	11.0 / 15.0 / 18.5 / 22.0
Dimensions [L x W x H] mm	233 x 153 x 120	270 x 189 x 140	307 x 223 x 181	414 x 294 x 232

Sizes

1 Important information

This chapter contains important information on safe handling of the product and on the operating manual.

1.1 Information about documentation

The following information explains how to navigate through the documentation.

We assume no liability for any damage resulting from the non-observance of this manual.

Provide the operator of the system with this manual so it is available as and when required.

1.1.1 Other applicable documents

This refers to all manuals that describe how to operate the drive control system and any other manuals for the equipment used. Download the 3D files (.stp) for INVEOR and adapter plates from www.kostal.com/industrie.

A description of parameters is available for download (www.kostal.com/industrie) for parameterising the drive control system. In the download, you will find all the information required for correct parameterisation.

1.1.2 Storing the documentation

Store this manual and all other applicable documents safely so they are available as and when required.

1.1.3 Symbols

⚠ **DANGER**

Note on safety: Non-observance will result in death or serious injury.

⚠ **WARNING**

Note on safety: Non-observance may result in death or serious injury.

ATTENTION!

Non-observance may result in materials being damaged and may affect the function of the drive control.

Additional information on operating the drive control.

- Action: This symbol indicates that you have to perform an action. The required actions are described step by step.
- ➢ This symbol indicates the result of an action.

1.2 Qualified staff

In the context of this operating manual and the information relating to the product itself, qualified staff refers to electronic specialists who are familiar with the installation, assembly, start-up and operation of the drive control and the dangers involved, and whose specialist training and knowledge of relevant standards and regulations provide them with the necessary abilities.

1.3 CE marking

With the CE marking, we, as the manufacturer of the device, confirm that the drive control meets the basic requirements of the following guidelines:

– Directive on Electromagnetic Compatibility (Directive 2004/108/EC of the Council)
– Low Voltage Directive (Directive 2006/95/EC of the Council)

You can download the declaration of conformity from www.kostal.com/industrie.

1.4 Safety instructions

The following warnings, precautionary measures and comments are provided for your safety and serve to prevent damage to the drive control and the components connected to it. This chapter contains warnings and information that are generally applicable when handling drive controls. They are split into general information, transport & storage, start-up, operation, repairs and dismantling & disposal.

Specific warnings and comments that apply to specific activities can be found at the start of the appropriate chapters and are repeated and added to at various critical points in these chapters.

Please read this information carefully as it is provided for your personal safety and will also prolong the life of the drive control and connected devices.

1.4.1 General information

⚠ **WARNING**

This drive control carries a dangerous voltage and controls revolving mechanical parts that may be hazardous.

Failure to regard warnings or non-compliance with the information in this manual may result in death, serious injury or serious damage to property.

- Only appropriately trained persons may perform work on this drive control. These persons must be familiar with all safety instructions and all measures relating to installation, operation and maintenance that are contained in this manual. Proper and safe operation of the drive control requires proper transport, installation, operation and maintenance.

⚠ **WARNING**

Danger of fire or electric shock.

Improper use, changes and the use of spare parts and accessories not sold or recommended by the manufacturer of the drive control may result in fire, electric shock and injury.

- The cooling elements in the drive control and motor may reach temperatures above 70 °C. Ensure sufficient distance from neighbouring components during installation. Allow sufficient time for cooling before working on the drive control or motor. If necessary, protection should be installed against accidental contact.

ATTENTION!

The drive control can only be operated safely if the required environmental conditions listed in the “Suitable environmental conditions” chapter are met.

ATTENTION!

This operating manual must be kept near the device and available to all users.

ATTENTION!

Please read these safety instructions and warnings before installation and start-up; this also applies to all warning signs attached to the device. Make sure that the warning signs are legible and replace missing or damaged signs.

1.4.2 Transport & storage

ATTENTION!

Risk of damage to the drive control.

If the information is not observed, the drive control could be damaged and destroyed during subsequent start-up.

- Proper and safe operation of the drive control requires proper storage, set-up and assembly as well as careful operation and maintenance.
  The drive control must be protected from mechanical jolts and vibrations during transport and storage. Protection from impermissible temperatures (see technical data) must also be guaranteed.

1.4.3 Commissioning

⚠ **WARNING**

Danger of injury through electric shock.

Non-observance of warnings may result in serious injury or damage.

- Only hard-wired network connections are permitted. The device must be grounded (DIN EN 61140; VDE 0140-1).
- Frequency converters of the INVEOR range may have touch currents of 3.5mA. In accordance with DIN EN 61800-5-1 section 4.3.5.5.2, an extra protective grounding conductor with the same cross-section as the original protective grounding conductor must be fitted. A second protective grounding conductor can be connected under the mains supply (position marked with a ground symbol) on the outside of the device. A M6x15 screw (torque: 4.0 Nm) suitable for the connection is supplied with the adapter plates.
- If three-phase frequency inverters are used, it is not permitted to use standard type A FI protection switches, or RCDs (residual current-operated protective devices) to protect against direct or indirect contact. According to DIN VDE 0160, section 5.5.2 and EN 50178, section 5.2.11.1, the FI protection switch must be universal current sensitive (RCD type B).
- The following terminals may lead to dangerous currents even when the motor is not running:
  - Supply terminals X1: L1, L2, L3
  - Motor connection terminals X2: U, V, W
  - Connecting terminals X6, X7: Relay contacts for relays 1 and 2
  - PTC connection terminals T1/T2
- If different voltages are used (e.g. +24 V/230 V), crossing cable runs are not permitted under any circumstances. The operator must also ensure compliance with the applicable regulations (e.g. double or reinforced insulation acc. to DIN EN 61800-5-1).
- The drive control contains components susceptible to electrical discharge. These components may be destroyed through improper handling; therefore, precautionary measures against electrostatic charges must be taken when work is performed on these components.

1.4.4 Operation

⚠ WARNING

Danger of injury due to electric shocks or restarting motors.

Non-observance of warnings may result in serious injury or damage.

- Observe the following instructions during operation:
  - The drive control runs at high voltages.
  - When electrical devices are operated, some of their parts are always subject to dangerous voltage.
  - Emergency stop equipment according to DIN EN 60204-1; VDE 0113-1:2007-06 must function in all the control device's operating modes. Resetting the emergency stop equipment may not result in uncontrolled or undefined restarting.
  - In order to ensure safe disconnection from the mains, the mains cable has to be fully disconnected from the drive control in a synchronous manner.
  - A pause of at least 1 to 2 mins must be observed between consecutive mains activations for devices with a single-phase feed and for size D (11 to 22kW).
  - Certain parameter settings may result in the drive control restarting automatically after the supply voltage has failed.

ATTENTION!

Risk of damage to the drive control.

If the information is not observed, the drive control could be damaged and destroyed during subsequent start-up.

- Observe the following instructions during operation:
  - The motor parameters, especially the I^2T settings, have to be configured properly to provide proper motor overload protection.
  - The drive control has internal motor overload protection. See P0610 (level 3) and P0335. I^2T is ON by default. Motor overload protection can also be ensured via an external PTC.
  - The drive control may not be used as “Emergency stop equipment” (see DIN EN 60204-1; VDE 0113-1:2007-06).
  - Drive controls are maintenance-free if operated properly. If the air contains dust, the cooling fins of the motor and drive control have to be cleaned regularly.

1.4.5 Maintenance and inspection

The drive controls may only be maintained and inspected by electricians with recognised training. Unless explicitly described in this manual, changes to hardware and software may only be undertaken by KOSTAL experts.

1.4.5.1 Cleaning the drive controls

Drive controls are maintenance-free if operated properly. If the air contains dust, the cooling fins of the motor and drive control have to be cleaned regularly. If devices are fitted with integrated fans (optional for size C, standard for size D), we would recommend cleaning with compressed air.

1.4.5.2 Measurement of insulation resistance on control part

An insulation test on the control card's input terminals is not permitted.

1.4.5.3 Measurement of insulation resistance on power part

The power part of an INVEOR is tested with 1.9kV in the course of series testing.

Should the insulation resistance have to be measured during a system test, this can be done under the following conditions:

- an insulation test can be undertaken for the power part alone,
- to avoid excessively high voltages, all the INVEOR's connection cables must be disconnected before testing,
- a 500V DC insulation tester should be used.

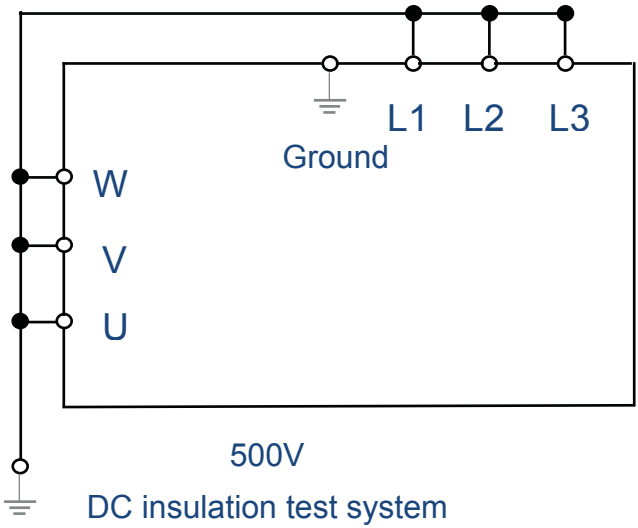

Fig. 1: Insulation test on the power board

1.4.5.4 Pressure test on an INVEOR

A standard INVEOR must not be pressure-tested.

1.4.6 Repairs

ATTENTION!

Risk of damage to the drive control.

If the information is not observed, the drive control could be damaged and destroyed during subsequent start-up.

- Repairs to the drive control may only be performed by the KOSTAL Service department.

⚠ **WARNING**

Danger of injury through electric shock.

Non-observance of warnings may result in serious injury or damage.

- When the drive control is disconnected from the mains voltage, live device parts and connections may not be touched immediately in case the condensers are still live.

1.4.7 Disassembly & disposal

☞ Screw and snap-on connections are easy to release and allow the drive control to be dismantled into its individual parts. These parts can be sorted for recycling. Please comply with local regulations during disposal.

☞ Components with electronic parts may not be disposed of along with normal household waste. They have to be collected separately with used electrical and electronic equipment in accordance with applicable legislation.

1.5 Proper use

If the device is installed in a machine, inverters may not be started up (i.e. intended operation may not begin) until it has been determined that the machine complies with the regulations of EC Directive 2006/42/EC (Machinery Directive); DIN EN 60204-1; VDE 0113-1:2007-06 must be observed.

Start-up (i.e. beginning intended operation) is only permitted if the EMC Directive (2004/108/EC) is complied with.

The harmonised standards of DIN EN 50178; VDE 0160:1998-04 must be applied for this drive control along with DIN EN 60439-1; VDE 0660-500:2005-01.

This drive control may not be operated in areas where there is a danger of explosion.

Repairs may only be performed by authorised repair bodies. Independent and unauthorised intervention may result in death, injury and damage. The warranty provided by KOSTAL will be invalidated in such cases.

External mechanical loads such as stepping on the housing are not permitted.

☞ Using drive units in equipment that is not fixed is considered as an exceptional environmental condition and is only permitted if allowed by the standards and guidelines applicable on site.

1.6 Responsibility

As a basic principle, electronic devices are not fail-proof. The operator and/or the contractor setting up the machine or system is responsible for ensuring that the drive switches to a safe state if the device fails.

The “Electrical equipment of machines” section in DIN EN 60204-1; VDE 0113-1:2007-06, “Safety of machinery” describes the safety requirements for electrical control units. These are provided for the safety of people and machines and must be observed in order to retain the functional capability of the machine or system.

An emergency stop feature does not have to result in the power supply to the drive being switched off. To avoid dangerous situations, it may be useful for individual drives to remain operational or for specific safety procedures to be

initiated. The effectiveness of emergency stop measures is evaluated by means of a risk assessment for the machine or system and its electrical equipment, and is determined by selecting a circuit category according to DIN EN 13849 “Safety of machinery – Safety-related parts of control systems”.

1.7 Contacts for further information

Further information is available from:

Central service hotline

Tel: +49 2331 8040-4848
Monday to Friday: 7 am to 5 pm (local time)

Fax: +49 2331 8040-4811

E-mail: INVEOR-service@kostal.com

Website address

Customers can access technical and general information from the following address:

www.kostal.com/industrie

2 Overview of the drive control

This chapter contains information on the scope of delivery for the drive control and the function description.

2.1 Model description

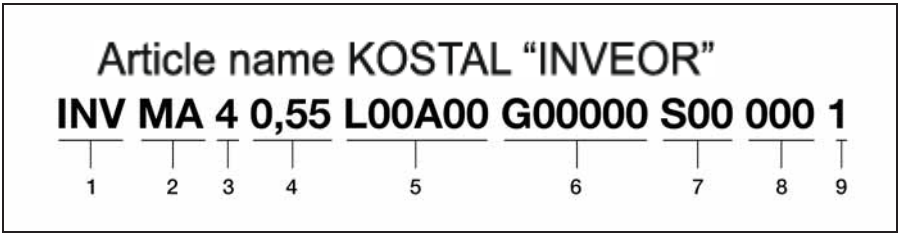

Fig. 2: Article description

Key	
1 Drive control series: **INVEOR** 2 Installation location/size: **M** – integrated in a motor, size: **A**, B, C, D	6 Housing: **G0** – standard (black with inscription); **0** – standard (cooling element); **0** – standard (with potentiometer); **00** – standard screw connections
	7 Firmware version: **S00** – standard
3 Input voltage: 2 – 230V **4** – 400 V	8 Versions: **000** – standard; **001** – specific
4 Recommended motor power: **0.55**; 0.75; 1.1; 1.5; 2.2; 3; 4; 5.5; 7.5; 11; 15; 18.5; 22 kW	9 Equipment generation: **1** – current version
5 Printed circuit board: **L00** – standard (without brake chopper); **A00** – standard (without TTL evaluation); **–** standard (without field bus)	

2.2 Scope of delivery

Compare your product with the scope of delivery provided below.

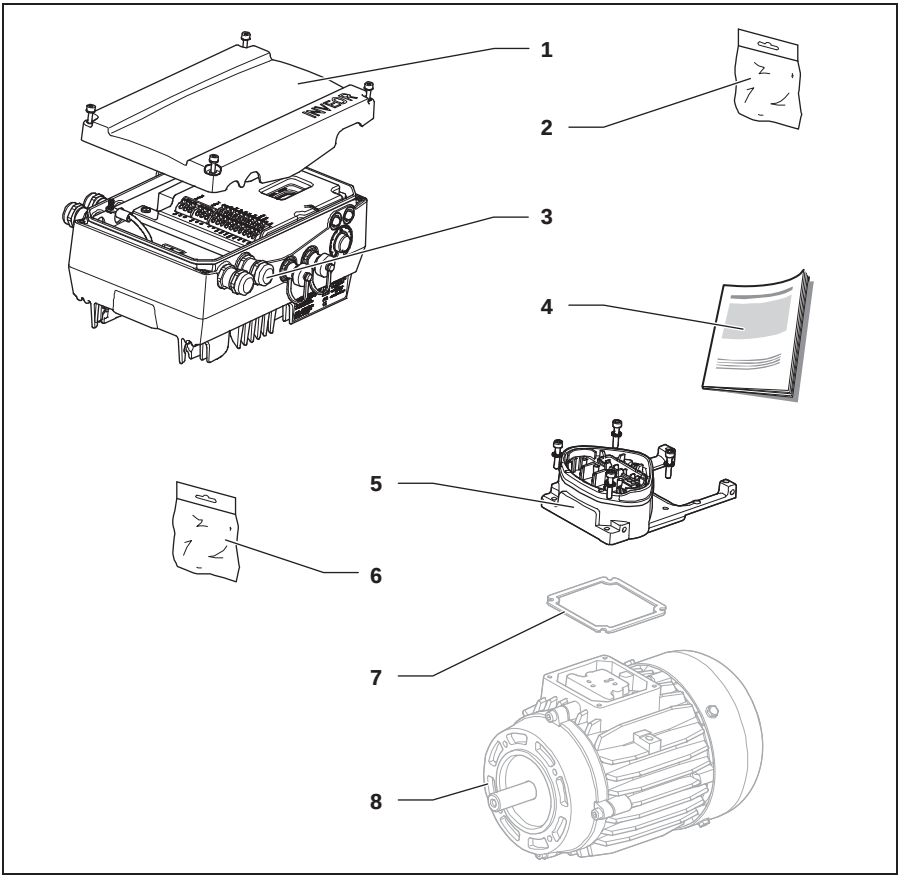

Fig. 3: Scope of delivery

Key	
Drive control article number	**Adapter plate article number**
1 Drive control (variant)	5 Adapter plate with connecting terminal
2 Poly bag containing fastening bolts	6 Poly bag containing connecting material for terminal block
3 Cable screw connections	
4 Operating manual	
	7 Seal (not part of the scope of delivery)
	8 Motor (not part of the scope of delivery)

2.3 Description of the INVEOR drive control

The INVEOR drive control is a device for speed control in three-phase AC motors.

The drive control can be integrated in the motor (with the standard adapter plate) or fitted close to the motor (with the wall installation adapter plate).

The permitted ambient temperatures specified in the technical data refer to operation at nominal load. In many cases, higher temperatures may be permitted after a detailed technical analysis. These have to be approved by KOSTAL on a case-by-case basis.

3 Installation

3.1 Safety instructions for installation

⚠ **WARNING**

- Installation may only be performed by appropriately qualified employees who are trained in the set-up, installation, start-up and operation of the product. Work performed on the drive control by unqualified staff and non-observance of warnings may result in serious injury or damage.
- The device must be grounded in accordance with DIN EN 61140; VDE 0140, NEC and other relevant standards. Mains connections must be hardwired.

3.2 Installation requirements

3.2.1 Suitable ambient conditions

Altitude of the installation site:	up to 1000 m above sea level / over 1000 m with reduced performance (1% per 100 m) (max. 2000 m) (see chapter 7.2)
Ambient temperature:	-25 °C to +50 °C (different ambient temperatures may be possible in individual cases) (see chapter 7.2)
Relative humidity:	≤ 96%, condensation not permitted
Resistance to vibration and shock:	acc. to FN 942 017 part 4; 5.3.3.3 Combined test 2; 5...200 Hz for sinusoidal oscillation
Electromagnetic compatibility:	Immune to interference acc. to DIN EN 61800-3
Cooling:	Surface cooling: sizes A to C: free convection; size C: with option of integrated fan size D: with integrated fans

Tab. 1: Ambient conditions

- Ensure that the housing type (protection type) is suitable for the operating environment:
  - Ensure that the seal between the motor and the adapter plate is inserted correctly.
  - All unused cable screw connections must be sealed.
  - Check that the cover of the drive control is closed and bolted down tightly.

Although the drive control can, in principle, be painted later on, the user must nevertheless check the material compatibility of the intended paint. Failure to comply with this requirement may eventually result in the loss of the protection class (particularly in respect to seals and fibre-optic elements). The standard colour is black (RAL 9005).
Disassembling the circuit boards (even for the purpose of painting the housing sections) renders the warranty void!
Mounting points and sealing surfaces must be kept free of paint for purposes of EMC and grounding!

3.2.2 Suitable installation location for the motor-integrated drive control

- Ensure that the motor with a motor-integrated drive control is only installed and operated if aligned as shown in the following diagram.

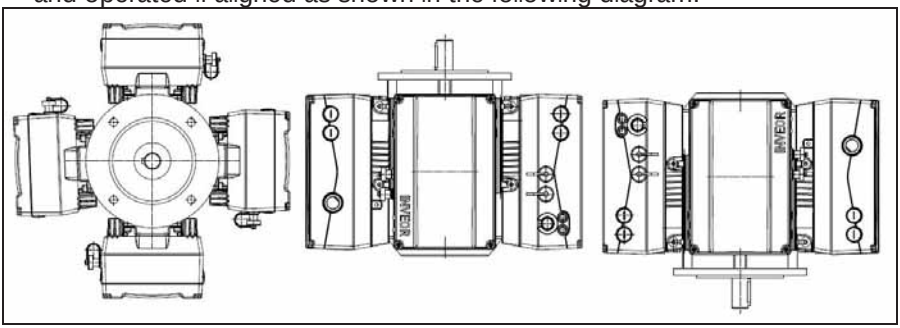

Fig. 4: Motor installation location/permitted alignments

3.2.3 Basic connection versions

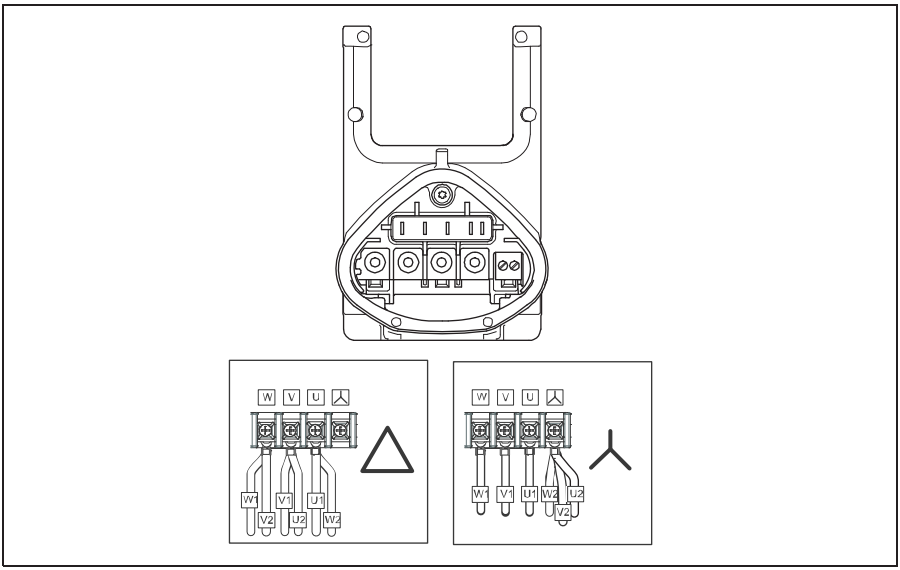

Fig. 5: Star or triangle connection for drive controls integrated in the motor

ATTENTION!

Risk of damage to the drive control.

The correct phase sequence must be observed when the drive control is connected as the motor could otherwise be overloaded.

- Ensure that the phase sequence is correct when connecting the motor.

The supplied assembly material can be used to connect core end sleeves and cable shoes. Fig. 4 shows the different connection options.

Unused open cable ends in the motor terminal box must be insulated.

If a PTC or Klixxon is used, the bridging contact fitted on the connection terminal for the PTC in the delivery state has to be removed.

The cross-section of the supply line must be designed according to the transfer category and maximum permitted current. The contractor starting up the device must ensure protection for the power line.

3.2.4 Short circuit and ground protection

The drive control contains internal short circuit and ground protection.

3.2.5 Wiring instructions

The control connections of the application card are located inside the drive control.
The configuration may vary depending on the version.

Terminals:	Plug terminal clamp with activation button (slot screwdriver, max. width 2.5 mm)
Connection cross-section:	0.5 to 1.5 mm^2, single-wire, AWG 20 to AWG 14
Connection cross-section:	0.75 to 1.5 mm^2, fine-wired, AWG 18 to AWG 14
Connection cross-section:	0.5 to 1.0 mm^2, fine-wired, (core end sleeves with and without plastic collar)
Length of stripped insulation:	9 to 10 mm

The terminals for the mains cable are located inside the drive control. The INVEOR also has the option of being equipped with terminals for connecting a brake resistor.
The configuration may vary depending on the version.

Core end sleeves with plastic collars and lugs are recommended.

Terminals:	Spring force connection (slot screwdriver, max. width 2.5 mm)
Connection cross-section:	0.2 to 10 mm^2, rigid, 0.2 to 6 mm^2, flexible
Connection cross-section:	0.25 to 6 mm^2 (core end sleeves without plastic collar)
Connection cross-section:	0.25 to 4 mm^2 (core end sleeves with plastic collar)
Connection cross-section:	0.25 to 1.5 mm^2 for 2 conductors of the same cross-section (twin-core end sleeves with plastic collar)
Conductor cross-section:	AWG 24 to AWG 8
Length of stripped insulation:	15 mm
Mounting temperature:	-5°C to +100°C

3.2.6 Preventing electromagnetic interferences

Screened lines should be used for control circuits where possible. The shielding should be applied to the line end with special care and without laying the leads across longer stretches without shielding.

Screening for analogue target values should only be applied on one side of the drive control.
In principle, control cables should always be laid as far away from power-conducting lines as possible; separate ducts may have to be used. If lines do cross, they should do so at an angle of 90°.

Upstream circuit elements, such as protector switches and brake coils, or circuit elements that are operated via the outputs of the drive control have to be interference-suppressed. RC circuits are suitable as AC voltage protector switches, while free-wheeling diodes or varistors are usually used as DC voltage protector switches. These interference suppression devices are attached directly to the protector switch coils. The power supply for a mechanical brake may not be carried in the same cable.

Power connections between the drive control and motor should always be shielded or reinforced, and the shielding must have large-scale grounding at both ends. The use of EMC cable screw connections is recommended. These are not part of the scope of delivery.

Wiring suitable for EMC must be ensured.

3.3 Installing the drive control integrated in the motor

3.3.1 Mechanical installation

3.3.1.1 Mechanical installation of sizes A - C

Proceed as follows when mechanically installing the drive control:

1. Open the standard motor connection box.
2. Disconnect the wires from the connection terminals. Memorise or write down the connection sequence.
3. Remove the motor terminal block if necessary.
4. Remove the fastening screws of the connection housing and take out the housing. Make sure that the seal is not damaged.

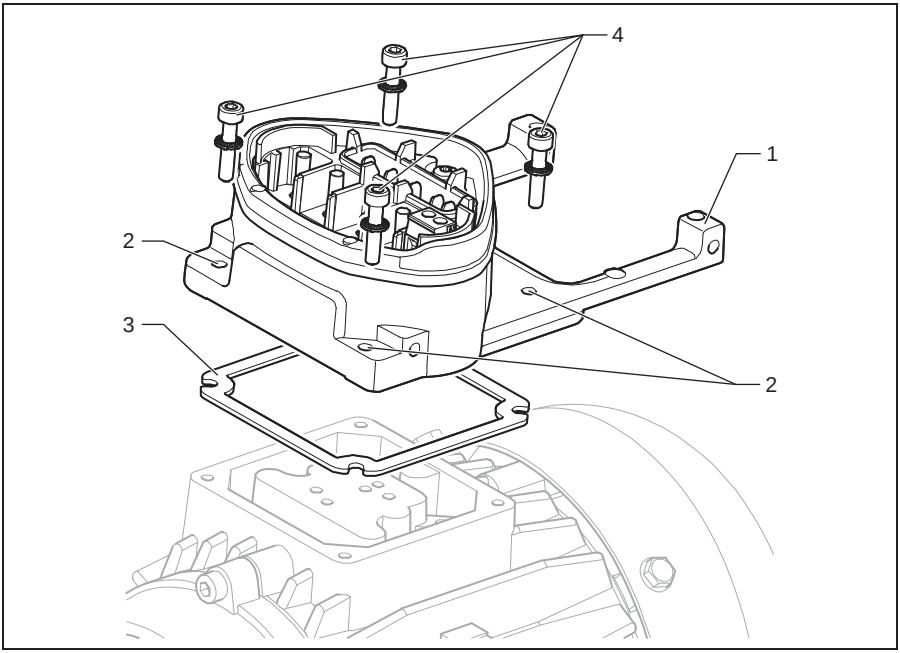

Fig. 6: Assembly sequence: Connection box – adapter plate sizes A - C

The standard adapter plate is a plate the underside of which is not reworked. There are no holes.

You can order individually modified adapter plates from KOSTAL for selected motors.

5. Modify the adapter plate (1) by producing the necessary holes (2) for mounting on the motor.

The commissioning technician is responsible for protection class compliance when sealing the adapter plate on the motor.
If you have any questions, please ask your KOSTAL contact.

6. Fit the seal (3).
7. Lead the motor connection line past the connection terminal and through the adapter plate; attach the adapter plate to the motor with the four retaining bolts and the four spring elements (4) (torque: 2.0 Nm).

When mounting the adapter plates, ensure that all four screws, including the spring elements, are tightened to the corresponding torque! All contact points must be free of dirt/paint because otherwise a correct protective conductor connection is not ensured!

8. Attach the motor wires in the correct circuit, see also Fig. 5 (torque: 3.0 Nm). We would recommend using insulated M5 annular cable sockets with a connection cross-section of 4 to 6 mm^2.

When installing the motor wires, ensure that all bolts on the terminal board are fitted with the nuts provided even if the star point is not connected!

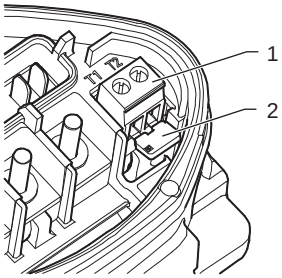

Fig. 7: Bridging contact

9. If a motor PTC/Klixxon is available, wire the connection cables to terminals T1 and T2 (1) (torque: 0.6 Nm).

During assembly, ensure that the connection cable is not crushed.

If the motor is fitted with a temperature sensor, this is connected to the T1 and T2 terminals (1) - the bridging contact (2) inserted for delivery must be removed for this purpose.
When the bridge is in place, the temperature of the motor is not monitored!

10. Plug the drive control onto the adapter plate and fasten it evenly using the four lateral bolts (torque: 4.0 Nm).

3.3.1.2 Mechanical installation of size D

Proceed as follows to mechanically install the drive control:

1. Open the standard motor connection box.
2. Remove the connection housing's retaining bolts and take the housing off. Be careful not to damage the seal.

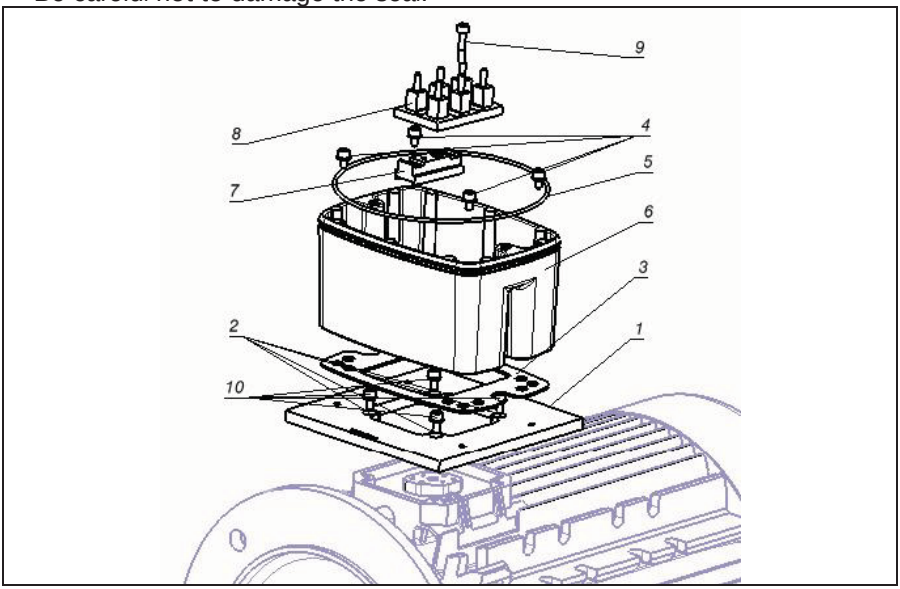

Fig. 8: Assembly sequence: Connection box – adapter plate, size D

Key	
1 Adapter plate option (variant)	6 INVEOR/adapter plate support
2 Holes depending on motor	7 Junction plate heightening option
3 Seal	8 Original junction plate (not included)
4 Retaining bolts with spring elements	9 Extended screw option (for 7)
5 O-ring seal	10 Retaining bolts with spring elements option

The standard adapter plate is a plate the underside of which is not reworked. No holes have been produced yet.

You can order individually modified adapter plates from KOSTAL for selected motors.

3. Modify the adapter plate (1) by producing the necessary holes (2) for mounting on the motor.

The commissioning technician is responsible for protection class compliance when sealing the adapter plate on the motor.
If you have any questions, please ask your KOSTAL contact.

4. Fit the seal (3).
5. Screw the adapter plate on to the motor with the four retaining bolts and four spring elements (10) (torques: M4 to 2.4 Nm, M5 to 5.0 Nm, M6 to 8.5 Nm).

When mounting the adapter plates, ensure that all four screws, including the spring elements, are tightened to the necessary torque! All contact points must be free of dirt/paint because otherwise a correct protective conductor connection is not ensured!

6. Secure the original junction plate (8), if necessary using the optional junction plate heightening part (7) and the optional extended screw (9), back on the motor.
7. Connect four strands (PE, U, V, W) of the corresponding cross-section (depending on rating of INVEOR used) to the original junction plate.

The connection strands (approx. 30 cm) needed to wire the motor junction plate/INVEOR are not included in the scope of supply!

8. Screw the support (6) to the adapter plate with four retaining bolts (4) and four spring elements (4). Please ensure that the seal (5) sits perfectly. Guide the four strands (PE, U, V, W) through the INVEOR's support.

9. Attach the drive control to the support (6) and secure it evenly with two M8 screws (torque: max. 21.0 Nm).

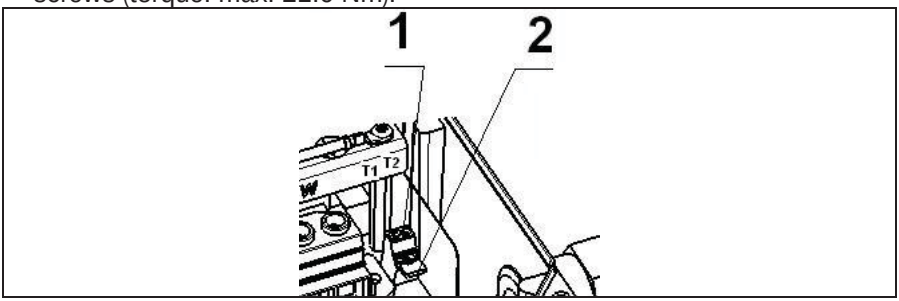

Fig. 9: Bridging contact

10 If present, wire the connection cable of the motor PTC/Klixxon to the T1 and T2 terminals (1) (torque: 0.6 Nm).

During assembly, ensure that the connection cable is not crushed!

If the motor is fitted with a temperature sensor, this is connected to the T1 and T2 terminals (1) - the bridging contact (2) inserted for delivery must be removed for this purpose.
When the bridge is in place, the temperature of the motor is not monitored!

3.3.2 Power connection

3.3.2.1 Power connection for sizes A - C

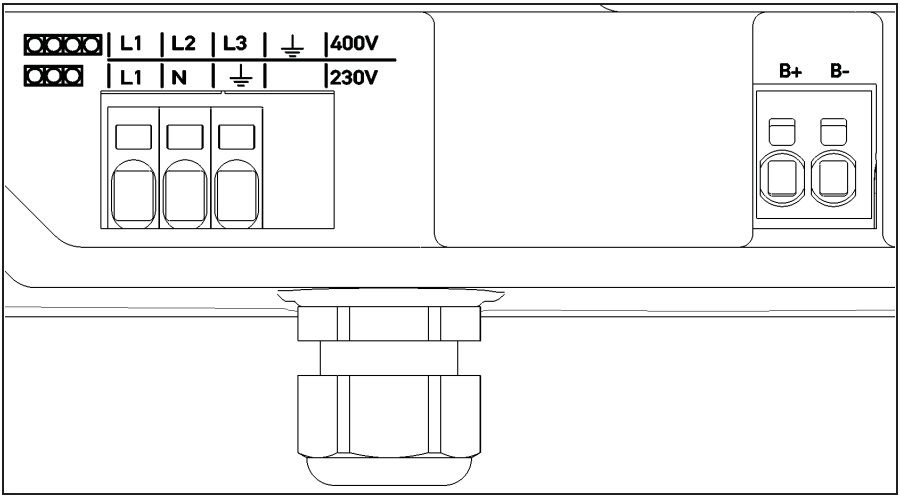

Fig. 10: Power connection sizes A - C

- Unscrew the four bolts from the housing cover of the drive control and remove the cover.
- Guide the power cable through the cable connection and connect the phases to contacts L1, N for 230V or L1, L2, L3 for 400V and the ground cable to the PE contact of the connection terminal. The cable screw connection provides strain relief, and the PE connection cable must be connected in a leading fashion (considerably longer).

When connecting a brake resistor to an optional braking module, cables with shielding and double insulation must be used.

Terminal no.	Designation	Assignment
1	L1	Mains phase 1
2	L2	Mains phase 2
3	L3	Mains phase 3
4	PE	Ground cable

Tab. 2: 3~ 400V terminal configuration X1

Terminal no.	Designation	Assignment

Terminal no.	Designation	Assignment
1	L1	DC mains (+) (565V)
2	L2	Not assigned
3	L3	DC mains (-)
4	PE	Ground cable

Tab. 3: DC feed 250 to 750V terminal assignment X1

Terminal no.	Designation	Assignment
1	L1	Mains phase 1
2	N	Neutral wire
3	PE	Ground cable
4		Not used

Tab. 4: 1~ 230V terminal configuration X1

3.3.2.2 Power connection for size D

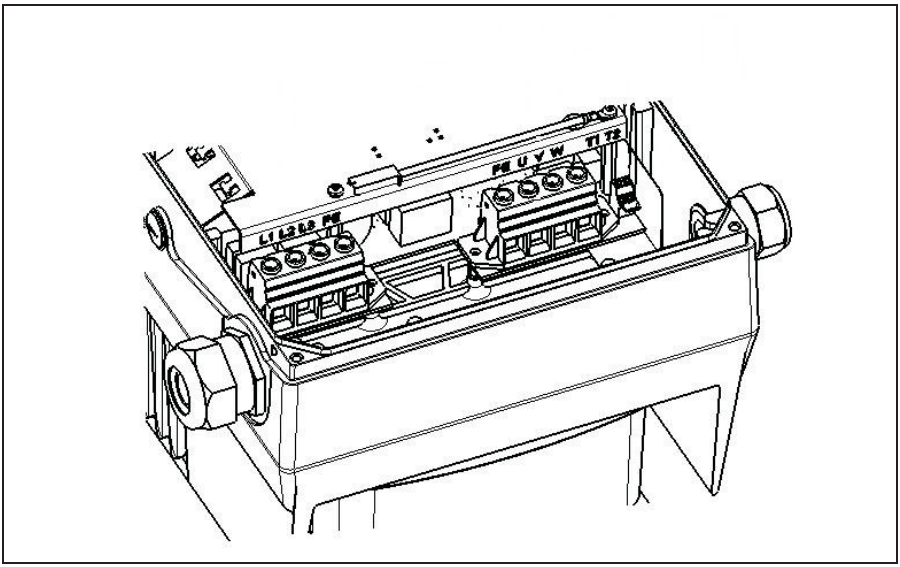

Fig. 11: Power connection for size D

- Unscrew the four screws from the drive control's housing cover and take off the cover.
- Guide the mains connection cable through the cable screw connection and connect the phases with the L1, L2, L3 contacts for 400 V and the ground cable with the PE contact on the connection terminal. The cable screw connection provides strain relief, and the PE connection cable must be connected in a leading fashion (considerably longer)!

When connecting a brake resistor to an optional braking module, cables with shielding and double insulation must be used!

Terminal no.	Designation	Assignment
1	L1	Mains phase 1
2	L2	Mains phase 2
3	L3	Mains phase 3
4	PE	Ground cable

Tab. 5: 3~ 400 V terminal assignment X1

Terminal no.	Designation	Assignment
1	L1	DC mains (+) (565V)
2	L2	Not assigned
3	L3	DC mains (-)
4	PE	Ground cable

Tab. 6: DC feed 250 to 750 V terminal assignment X1

Terminal no.	Designation	Assignment
1	PE	Ground cable
2	U	Motor phase 1
3	V	Motor phase 2
4	W	Motor phase 3

Tab. 7: Motor connection assignment X4

3.3.3 Connections for brake resistor

Terminal no.	Designation	Assignment
1	B+	Connection for brake resistor (+)
2	B–	Connection for brake resistor (-)

Tab. 8: Optional terminal configuration for brake chopper

3.3.4 Control ports

3.3.4.1 Control port of the standard application board

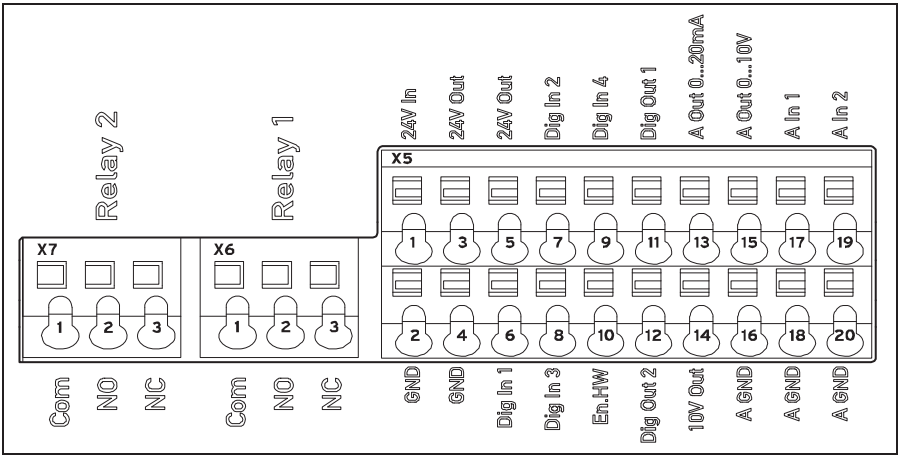

Fig. 12: Control port of the standard application board

ATTENTION

Danger of external signals being coupled in.

Use only shielded control lines.

- Guide the required control cables into the housing through the cable screw connections.
- Connect the control cables according to the figure and/or table. Use shielded control cables.
- Place the cover on the housing of the drive control and bolt it (torque: 2.0 Nm) tight.

Terminal no.	Designation	Assignment
1	24 V In	Ext. power supply
2	GND (ground)	Ground
3	24 V Out	Int. power supply
4	GND (ground)	Ground
5	24 V Out	Int. power supply
6	Dig. In 1	Target value release (parameter 1.131)
7	Dig. In 2	Free (not assigned)
8	Dig. In 3	Free (not assigned)
9	Dig. In 4	Error reset (parameter 1.180)
10	En HW (release)	Enable hardware
11	Dig. Out 1	Fault message (parameter 4.150)
12	Dig. Out 2	Free (not assigned)
13	A. Out 0 ... 20 mA	Actual frequency (parameter 4.100)
14	10 V Out	For ext. voltage divider
15	A. Out 0 ... 10 V	Actual frequency (parameter 4.100)
16	A GND (ground 10 V)	Ground
17	A. In 1	PID feedback (parameter 3.060)
18	A GND (ground 10 V)	Ground
19	A. In 2	Free (not assigned)
20	A GND (ground 10 V)	Ground

Tab. 9: Terminal configuration X5 of the standard application board

Terminal no.	Designation	Assignment
1	COM	Centre contact relay 1
2	NO	Normally open relay 1
3	NC	Normally closed relay 1

Tab. 10: Terminal configuration X6 (relay 1)

In the factory setting, relay 1 is programmed as “relay error” (parameter 4.190).

Terminal no.	Designation	Assignment
1	COM	Centre contact relay 2
2	NO	Normally open relay 2
3	NC	Normally closed relay 2

Tab. 11: Terminal configuration X7 (relay 2)

In the factory setting, “no function” is assigned to relay 2
(parameter 4.210).

3.3.4.2 Control port of the basic application board

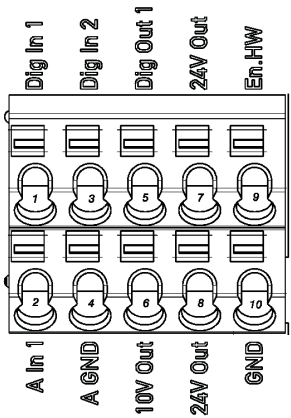

Fig. 13: Control port of the basic application board

Terminal no.	Designation	Assignment
1	Dig. In 1	Target value release (parameter 1.131)
2	A. In 1	Free (not assigned)
3	Dig. In 2	Free (not assigned)
4	A GND (ground 10 V)	Ground
5	Dig. Out 1	Fault message (parameter 4.150)
6	10 V Out	For ext. voltage divider
7	24 V Out	Int. power supply
8	24 V Out	Int. power supply
9	En HW (release)	Enable hardware
10	GND (ground)	Ground

Tab. 12: Terminal configuration X5 of the basic application board

3.3.5 Terminal connection diagram

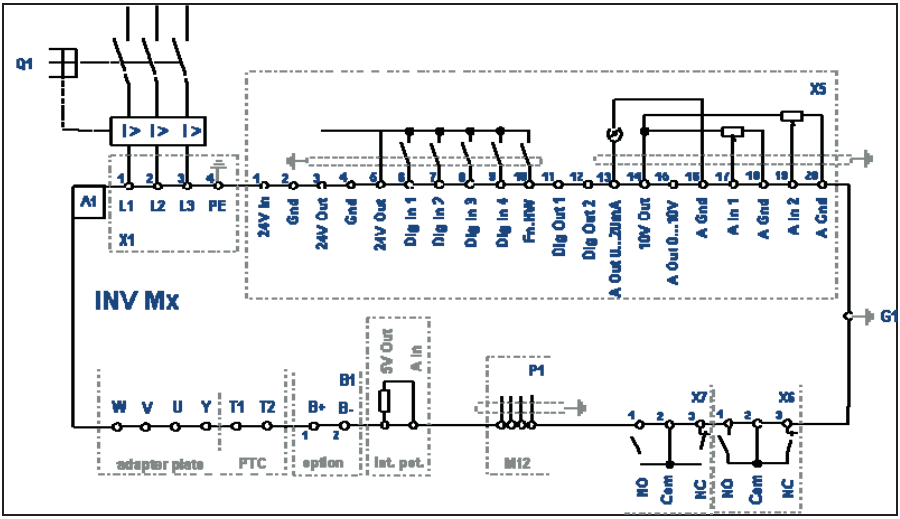

Fig. 14: Connection diagram

The drive control is ready once a 400 V AC mains supply has been activated (on terminals L1 to L3) or a 565 V DC mains supply has been activated (on terminals L1 and L3).

The drive control can also be started up by connecting an external 24 V voltage.
The presetting required for this is described in the "System parameters" chapter.

3.4 Installing the wall-mounted drive control

3.4.1 Suitable installation location for wall mounting

- Ensure that the installation location for a INVEOR wall mounting meets the following conditions:
  - The drive control has to be mounted on an even and fixed surface.
  - The drive control may only be mounted on non-flammable bases.
  - There must be a minimum of 20 cm clearance all around the drive control to ensure free convection.

The following figure shows the assembly dimensions and the free spaces required for installing the drive control.

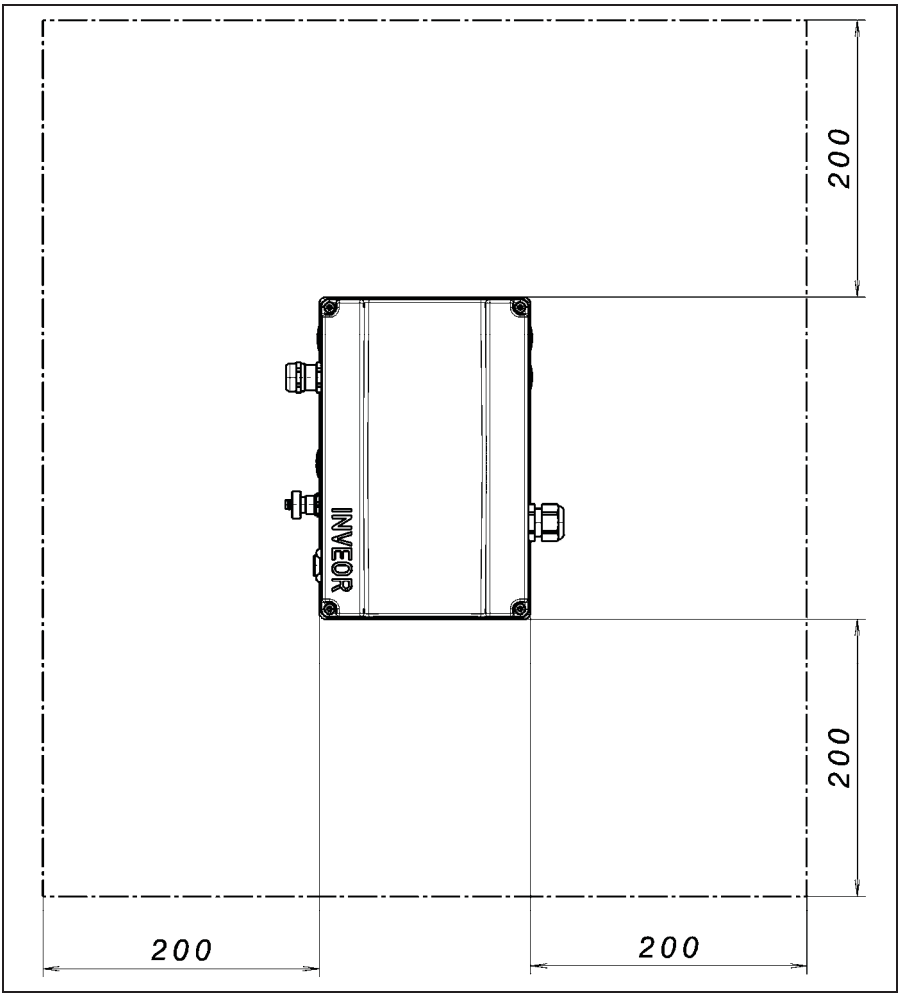

Fig. 15: Minimum clearances

For the "wall mounting" version, the line length between the motor and INVEOR may not exceed 5 m. A shielded cable with the required cross-section must be used. There must be a PE connection (underneath the wall mounting's terminal board)!

3.4.2 Mechanical installation

Fig. 16: Wiring on the motor connection box

- Open the motor connection box.

ATTENTION

Depending on the required motor voltage, the star or triangle connection must be made in the motor connection box!

- Use a suitable EMC screw connection to attach the shielded cable to the motor connection box and ensure that the shielding contact is in order (large surface).
- Connecting a PE connection in the motor connection box is mandatory.
- Close the motor connection box.

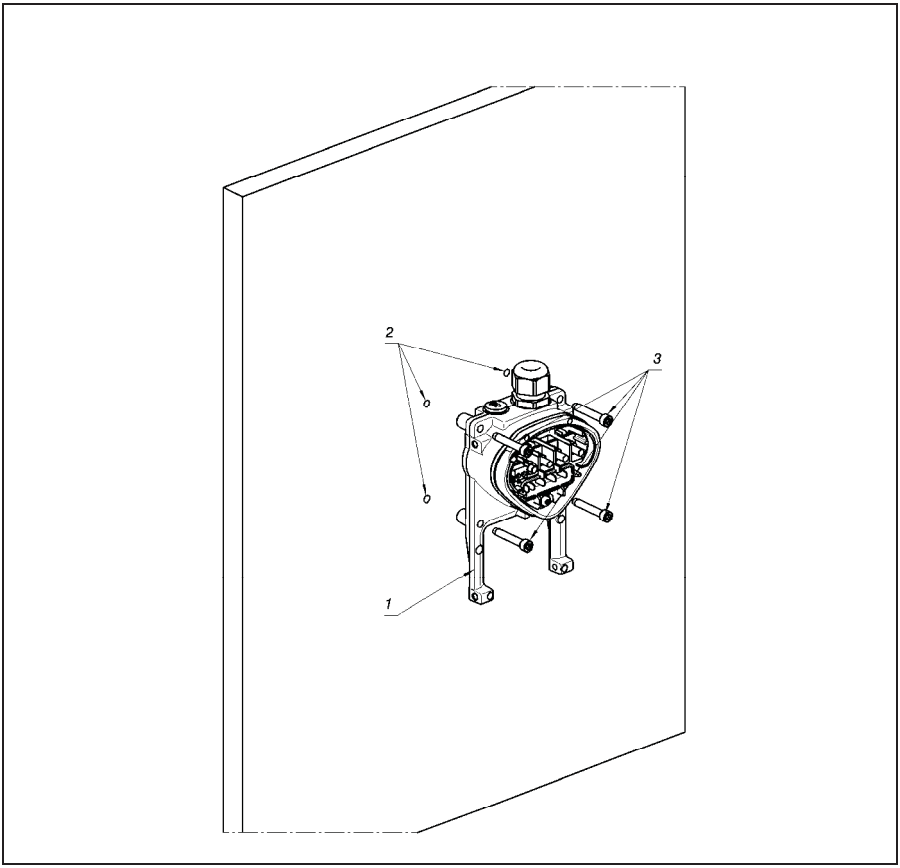

Fig. 17: Fastening the adapter plate to a wall

⚠ **DANGER!**

The drive control may not be installed without an adapter plate!

- Find a position that meets the required ambient conditions described in the "Installation requirements" section.
- To achieve optimum self-convection of the drive control, ensure that the (EMC) screw connection is facing upwards when installing.
- If there is no additional ventilation for the INVEOR (optional for size C), only vertical installation is permitted.

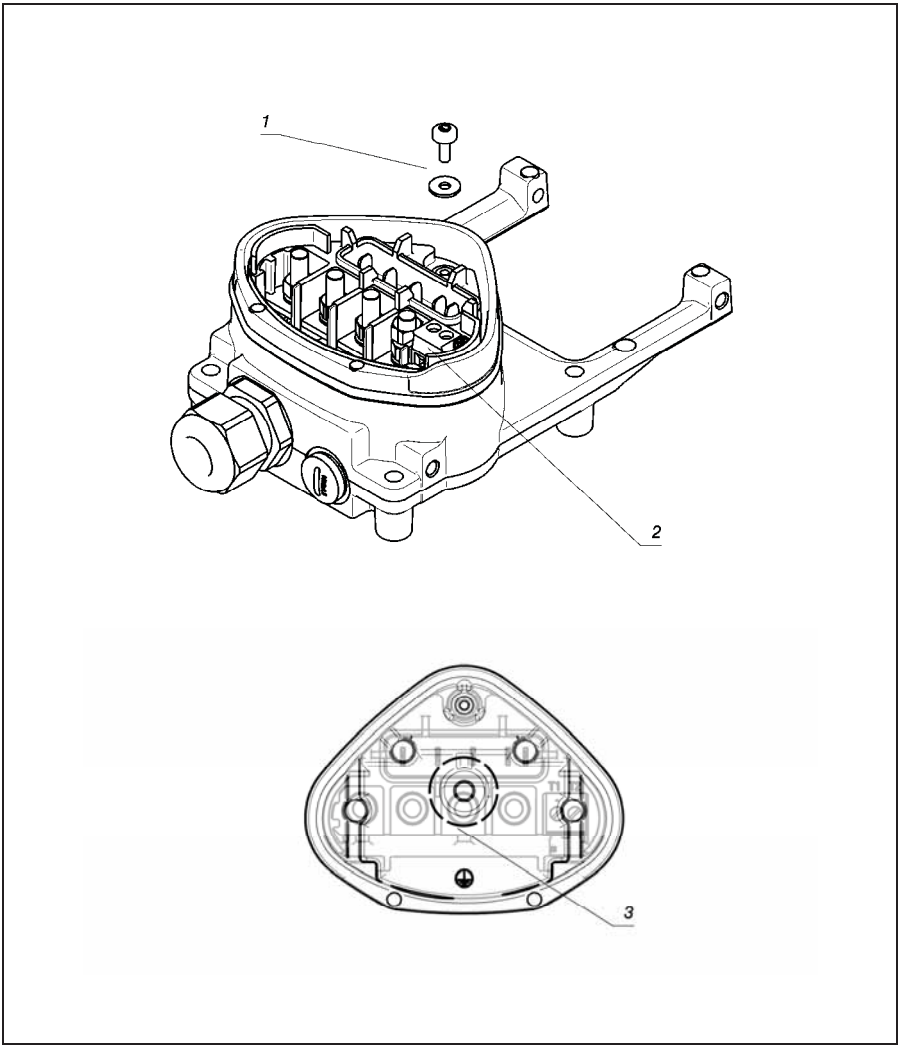

Fig. 18: Wiring

1. Release the screw (1) to remove the contact plate from the adapter plate. The (M6x15) PE connection (3) is underneath this contact plate.
2. Guide the connection cable from the motor to the adapter plate through the integrated EMC screw connection.
3. This PE connection (torque: 4.0 Nm) must be made to the same ground potential of the motor. The cross-section of the equipotential bonding line must correspond to at least the cross-section of the power cable.
4. Reattach the contact plate using the screw (**1**).

5. Wire the motor cable to contacts U, V, W (and the star point in some cases) in the connection terminal, as described in the "Basic connection versions" chapter. Use cable shoes (M5) to do this.
6. Before connecting an existing motor PTC to the T1 and T2 terminals, remove the pre-assembled short-circuit bridge (2).
   The motor PTC is potential-free once the INVEOR is connected, therefore it must be connected using a separate motor lead.
   Replace the dummy screw with a suitable standard screw connection and guide both ends to T1 and T2.

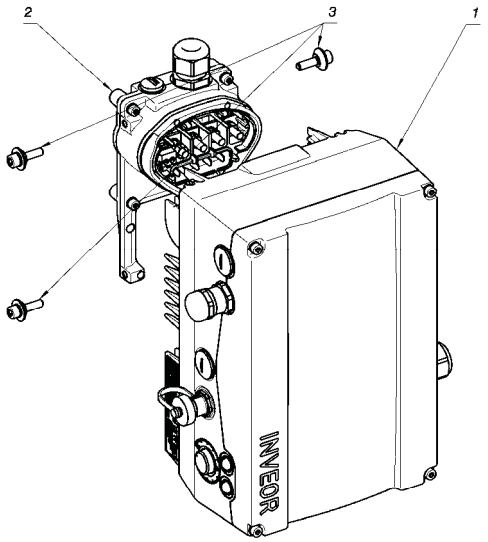

Fig. 19: Attaching the drive control

7. Position the drive control (1) on the adapter plate (2) so that the collar of the adapter dips into the opening on the floor of the cooling element.
8. Fasten the control unit to the adapter plate with the help of the screws (3) provided (torque: 4.0 Nm).

3.4.3 Power connection

The power connections should be designed as described in section 3.3.2 ff. "Installing the drive control integrated in the motor".

3.4.4 Brake chopper

The brake connections should be designed as described in section 3.3.3 ff. "Installing the drive control integrated in the motor".

3.4.5 Control connections

The control connections should be designed as described in section 3.3.4 ff. "Installing the drive control integrated in the motor".

4 Commissioning

4.1 Safety instructions for commissioning

ATTENTION!

Danger of damage

If the information is not observed, the drive control could be damaged and destroyed during subsequent start-up.

- Commissioning may only be performed by qualified staff. Safety precautions and warnings must always be observed.

⚠ **WARNING**

Danger of injury

Non-observance of warnings may result in serious injury or damage.

- Be sure that the power supply provides the correct voltage and is designed for the required current.
- Use suitable circuit breakers with the prescribed nominal current between the mains and drive control.
- Use suitable fuses with appropriate current values between the mains and drive control (see technical data).
- The drive control must be grounded with the motor according to relevant regulations. Non-compliance may result in serious injury.

4.2 Communication

The drive control can be commissioned in the following ways:

– Using the PC software

Fig. 20: PC software – start screen

– Using MMI

Fig. 21: Manual control unit MMI

4.3 Block diagram

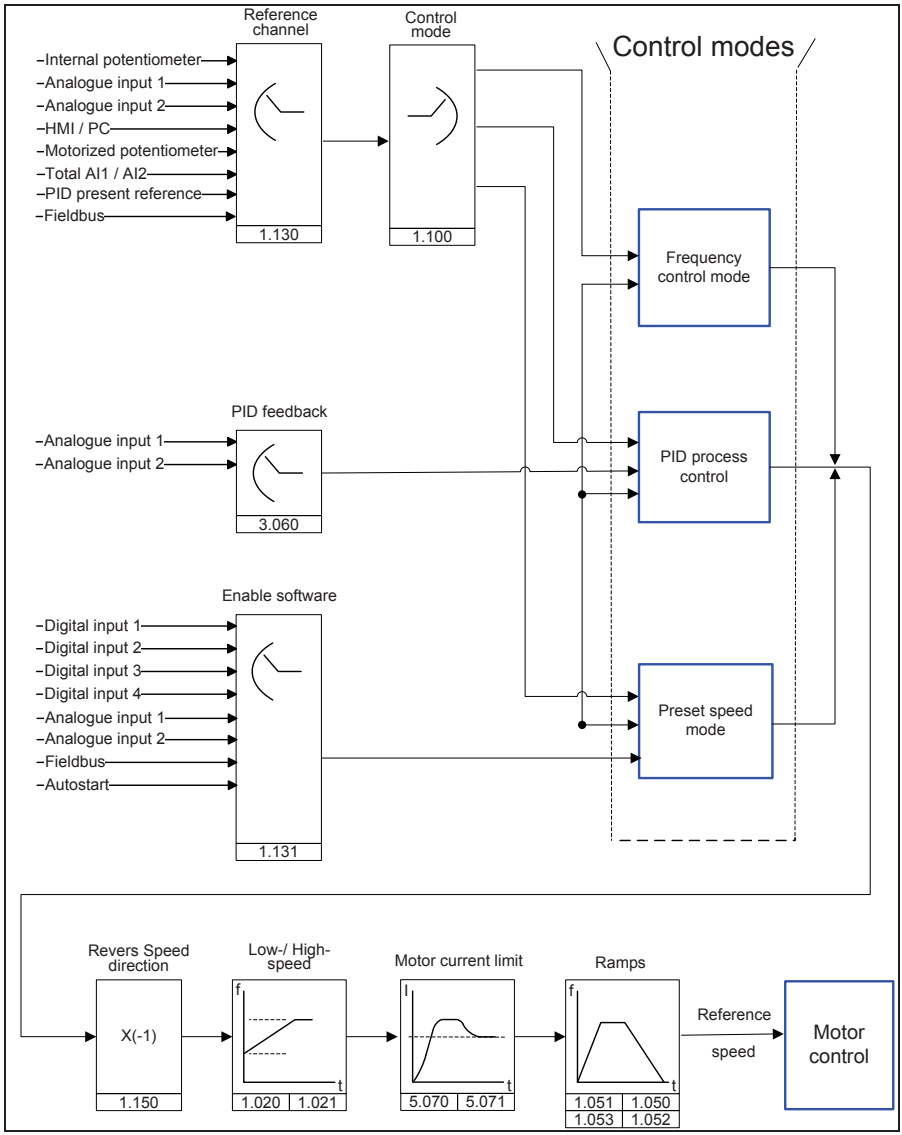

Fig. 22: General structure of target value generation

4.4 Start-up steps

Parameterisation is possible prior to installation. Parameterisation can be performed before the drive control is installed in the motor.
The drive control has a 24 V low-voltage input for this purpose, which can supply the electric system without requiring mains power.

The start-up can be performed using a PC communication cable USB at plug M12 with integrated interface converter RS485/RS232 (article no. 10023950) or using the INVEOR manual control unit MMI with connection cable RJ11 at plug M12 (article no. 10004768).

Start-up using the PC:

- Install the INVEORpc software (you can obtain programming software from KOSTAL free of charge).
- Connect the PC to the M12 plug M1 with the optional connection cable.
- Load or determine the motor data record (parameters 33.030 to 33.050); it may be necessary to optimise the speed control (parameters 34.100 to 34.101).
- Perform the application settings (ramps, inputs, outputs, target values etc.).
- Optional: Define an access level (1 – MMI, 2 – user, 3 – manufacturer).

Please also refer to the quickstart guide in chapter 9.5.

In order to ensure an ideal operating structure for the PC software, the parameters are classified into different access levels. The following levels exist:

1. Manual control unit: – the drive control is programmed using the manual control unit

2. User: – the basic parameters can be programmed into the drive control using the PC software

3. Manufacturer: – an extended selection of parameters can be programmed into the drive control using the PC software

5 Parameters

This chapter contains the following:

– An introduction to the parameters
– An overview of the most important start-up and operation parameters

5.1 Safety instructions for working with parameters

⚠ **WARNING**

Danger of injury due to restarting motors.

Non-observance may result in serious injury or damage.

- Certain parameter settings and changing parameter settings during operation may result in the INVEOR drive control restarting automatically after the supply voltage has failed, or in undesirable changes in the operating behaviour.

☞ If parameters are changed while the device is in operation, it may take a few seconds for the effect to become noticeable.

5.2 General information on parameters

5.2.1 Explanation of operating modes

The operating mode is the instance in which the reference is generated. In the case of frequency setting mode, this is a simple conversion of the raw input reference into a rotation speed reference; in the case of PID process control, the reference and feedback are compared and the system then regulates to a specific process variable.

Frequency setting mode:

The references from the “reference channel” (1.130) are rescaled into frequency references. 0% is the “low speed” (1.020), 100% is the “high speed” (1.021).
The reference's plus or minus sign is the decisive factor in rescaling.

PID process control:

The reference for the PID process control is read in percentage steps as in the “frequency setting mode”. 100% corresponds to the working range of the connected sensor, which is read in from the active channel (selected by the “PID feedback”).
Depending on the control difference, a rotation speed value is output to the control output with the help of the amplification factors for the proportional gain (3.050), integral gain (3.051) and derivative gain (3.052). In order to prevent the integral share from increasing infinitely in the case of uncontrollable control differences, this value is limited to a specific set value (corresponding to the “maximum frequency” (1.021)).

PID inverse:

The PID feedback can be inverted using the 3.061 parameter. The feedback is imported inversely, i.e. 0 V…10 V correspond internally to 100%…0%.
Please note that the reference must also be defined inversely.

For example:

A sensor with an analogue output signal of (0 V…10 V) is to operate as the source of the feedback channel (at AIx). At an output variable of 7 V (70%), this is to be regulated inversely. The internal feedback then corresponds to 100% – 70% = 30%. Accordingly, the specified reference is 30%.

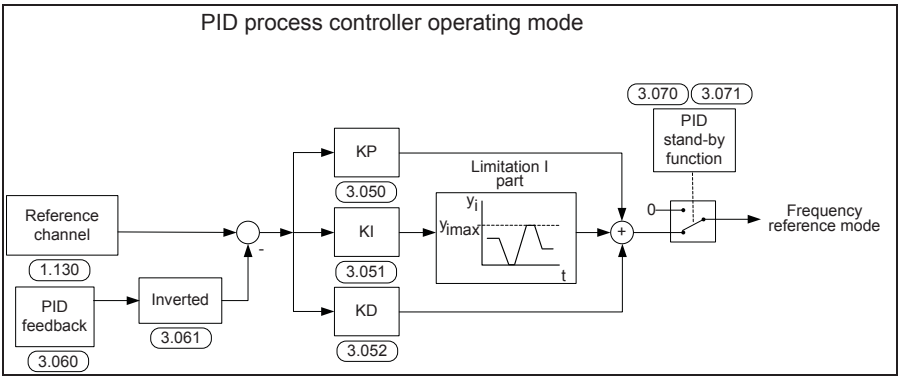

Fig. 23: PID process control

Stand-by function in PID process control:

This function can provide energy savings in applications such as booster stations where PID process control is used to control to a specific process value and the pump has to run at a “minimum frequency” (1.020). As the inverter can reduce the rotation speed of the pump in normal operation when the process variable is reducing, but it is never able to fall below the “minimum frequency” (1.020), this provides an opportunity for stopping the motor if it is running during a waiting time, the “PID stand-by time” (3.070) with the “minimum frequency” (1.020).

Once the reference diverges from the set % value, the “PID stand-by hysteresis” (3.071), the control (the motor) is started again.

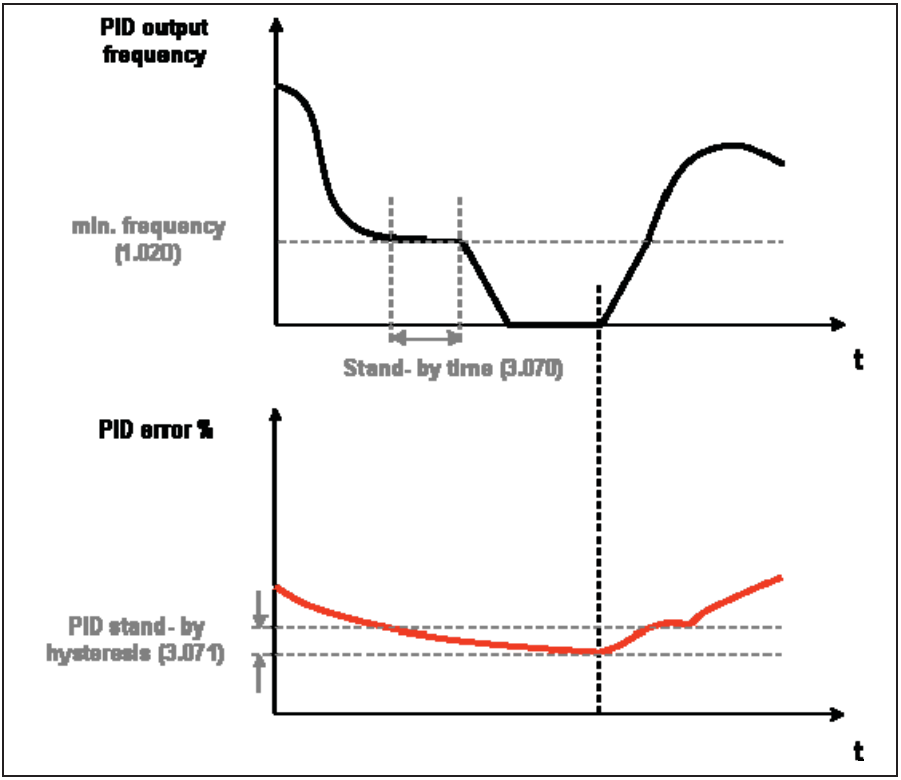

Fig. 24: Stand-by function in PID process control

Preset speed:

In this operating mode, preset speed references are transferred to the motor control. There are 7 preset speeds (2.051 to 2.057) that are BCD coded and attached permanently to digital inputs 1 to 3. These seven preset speeds can be released in three groups via the “preset speed mode” (2.050) parameter: 0 = preset speed 1, 1 = preset speeds 1 to 3, 2 = preset speeds 1 to 7.

DI 3	DI 2	DI 1	Selection	Parameters	Presetting
0	0	0	Min. frequency	1.020	0 Hz
0	0	1	Preset speed 1	2.051	10 Hz
0	1	0	Preset speed 2	2.052	20 Hz
0	1	1	Preset speed 3	2.053	30 Hz
1	0	0	Preset speed 4	2.054	35 Hz
1	0	1	Preset speed 5	2.055	40 Hz
1	1	0	Preset speed 6	2.056	45 Hz
1	1	1	Preset speed 7	2.057	50 Hz

Tab. 13: Logic table of fixed frequencies

5.2.2 Structure of the parameter tables

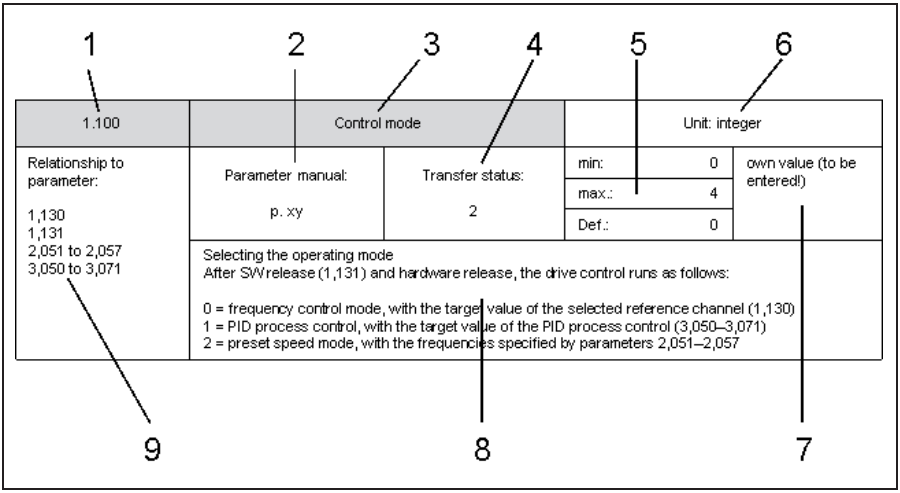

Fig. 25: Example of a parameter table

Key	
1 Parameter number	6 Unit
2 Description in the parameter manual on page ...	7 Field for entering an own value
3 Parameter name	8 Explanation of the parameter
4 Transfer status 0 = switch drive control off and on for transfer 1 = set hardware release again 2 = during operation	9 There are more parameters that relate to these parameters
5 Value range (from – to – factory setting)	

5.3 Application parameters

5.3.1 Basic parameters

1.020	Low speed		Unit: Hz	
Relationship to parameter: 1.150 3.070	Parameter manual: p. xy	Transfer status: 2	min: 0 max.: 400 def.: 0	Own value (**to be entered!**)
	The low speed is the frequency provided by the drive control as soon as it is released and no additional target value is pending. This frequency is not reached if a) acceleration is carried out while the drive is not moving. b) the frequency inverter is blocked. The frequency is then reduced to 0 Hz before it is blocked. c) the frequency inverter reverses (1.150). The revolving field is reversed at 0 Hz. d) the stand-by function (3.070) is active.			

1.021	High speed		Unit: Hz	
Relationship to parameter: 1.050 1.051	Parameter manual: p. xy	Transfer status: 2	min: 5 max.: 400 def.: 50	Own value (**to be entered!**)
	The high speed is the frequency produced by the inverter depending on the reference.			

1.050	Deceleration 1:		Unit: s	
Relationship to parameter: 1.021 1.054	Parameter manual: p. xy	Transfer status: 2	min: 0.1 max.: 1000 def.: 5	Own value (**to be entered!**)
	Deceleration 1 is the time that the inverter takes to brake to 0 Hz from the high speed (1.021). If the set deceleration time cannot be reached, the fastest possible deceleration time is implemented.			

1.051	Acceleration 1		Unit: s	
Relationship to parameter: 1.021 1.054	Parameter manual: p. xy	Transfer status: 2	min: 0.1 max.: 1000 def.: 5	Own value (**to be entered!**)
	Acceleration 1 is the time that the inverter takes to accelerate from 0 Hz to the high speed. The acceleration time can be increased as a result of certain circumstances, e.g. if the drive control is overloaded.			

1.052	Deceleration 2		Unit: s	
Relationship to parameter: 1.021 1.054	Parameter manual: p. xy	Transfer status: 2	min: 0.1 max.: 1000 def.: 10	Own value (**to be entered!**)
	Deceleration 2 is the time that the inverter takes to brake to 0 Hz from the high speed (1.021). If the set deceleration time cannot be reached, the fastest possible deceleration time is implemented.			

1.053	Acceleration 2		Unit: s	
Relationship to parameter: 1.021 1.054	Parameter manual: p. xy	Transfer status: 2	min: 0.1 max.: 1000 def.: 10	Own value (**to be entered!**)
	Acceleration 2 is the time that the inverter takes to accelerate from 0 Hz to the high speed. The acceleration time can be increased as a result of certain circumstances, e.g. if the drive control is overloaded.			

1.054	Ramp selection		Unit: integer	
Relationship to parameter: 1.050 to 1.053	Parameter manual: p. xy	Transfer status: 2	min: 0 max.: 6 def.: 0	Own value (**to be entered!**)
	Selection of used ramp pair 0 = deceleration 1 (1.050) / acceleration 1 (1.051) 1 = deceleration 2 (1.052) / acceleration 2 (1.053) 2 = digital input 1 (false = ramp pair 1 / true = ramp pair 2) 3 = digital input 2 (false = ramp pair 1 / true = ramp pair 2) 4 = digital input 3 (false = ramp pair 1 / true = ramp pair 2) 5 = digital input 4 (false = ramp pair 1 / true = ramp pair 2) 6 = INVEOR soft PLC			

1.100	Control mode		Unit: integer	
Relationship to parameter: 1.130 1.131 2.051 to 2.057 3.050 to 3.071	Parameter manual: p. xy	Transfer status: 2	min: 0 max.: 3 def.: 0	Own value (**to be entered!**)
	Selecting the operating mode. After software release (1.131) and hardware release, the drive control runs as follows: 0 = frequency control mode, with the target value of the selected reference channel (1.130) 1 = PID process control, with the target value of the PID process control (3.050–3.071) 2 = preset speed mode, with the frequencies specified by parameters 2.051–2.057 3 = selection from INVEOR soft PLC			

1.130	**Reference channel**		Unit: integer	
Relationship to parameter: 3.062 to 3.069	Parameter manual: p. xy	Transfer status: 2	min: 0 max.: 10 def.: 0	Own value (**to be entered!**)
	Determines the source from where the reference is to be read. 0 = internal potentiometer 1 = analogue input 1 2 = analogue input 2 3 = MMI/PC 4 = SAS 6 = motor potentiometer 7= total analogue inputs 1 and 2 8 = PID preset reference mode (3.062) 9 = field bus 10 = reference from INVEOR soft PLC			

1.131	**Enable software**		Unit: integer	
Relationship to parameter: 1.132 1.150 2.050 4.030 4.050	Parameter manual: p. xy	Transfer status: 2	min: 0 max.: 13 def.: 0	Own value (**to be entered!**)
	⚠ WARNING The motor may start immediately, depending on the change made. Selection of the source for the control release. 0 = digital input 1 1 = digital input 2 2 = digital input 3 3 = digital input 4 4 = analogue input 1 (has to be selected in parameter 4.030) 5 = analogue input 2 (has to be selected in parameter 4.050) 6 = field bus 7 = SAS 8 = digital input 1 right / digital input 2 left 1.150 must be set to “0” 9 = autostart: 10 = INVEOR Soft-PLC 11 = preset frequency input (all inputs which are selected in parameter 2.050) 12 = internal potentiometer 13 = membrane keyboard (start & stop buttons The motor may start immediately if hardware is enabled (En.Hw. Fig. 8) and a reference has been provided.			

	This cannot be prevented even with parameter 1.132.

1.132	Start protect		Unit: integer		
Relationship to parameter: 1.131	Parameter manual: p. xy	Transfer status: 2	min:	0	Own value (**to be entered!**)
			max.:	6	
			def.:	1	
	Selection of behaviour in response to enabling software (parameter 1.131). No effect if autostart was selected. 0 = immediate start when high signal is received at start input of control release 1 = start only if rising shoulder at start input of control release 2 = digital input 1 (function active at high signal) 3 = digital input 2 (function active at high signal) 4 = digital input 3 (function active at high signal) 5 = digital input 4 (function active at high signal) 6 = INVEOR soft PLC				

1.150	Direction of rotation		Unit: integer		
Relationship to parameter: 1.131 4.030 4.050	Parameter manual: p. xy	Transfer status: 2	min:	0	Own value (**to be entered!**)
			max.:	12	
			def.:	0	
	Selecting the direction of rotation specification 0 = dependent on target value (depending on the plus or minus sign of the target value: positive: forward; negative: backwards) 1 = forwards only (direction of rotation cannot be changed) 2 = backwards only (direction of rotation cannot be changed) 3 = digital input 1 (0 V = forwards, 24 V = backwards) 4 = digital input 2 (0 V = forwards, 24 V = backwards) 5 = digital input 3 (0 V = forwards, 24 V = backwards) 6 = digital input 4 (0 V = forwards, 24 V = backwards) 7 = reference from INVEOR soft PLC 8 = analogue input 1 (must be selected in parameter 4.030) 9 = analogue input 2 (must be selected in parameter 4.050) 10 = membrane keyboard button for changing direction of rotation (only when motor is running) 11 = membrane keyboard button 1 forwards / 2 reverse (change always possible) 12 = membrane keyboard button 1 forwards / 2 reverse (change only possible when motor is stationary)				

1.180	Reset		Unit: integer	
Relationship to parameter: 1.181 1.182	Parameter manual: p. xy	Transfer status: 2	min: 0 max.: 5 def.: 4	Own value (**to be entered!**)
	Selection of the source for error confirmation. Errors can only be confirmed once the error has been remedied. Some errors can only be confirmed by switching the control off and then on again, see list of errors. Auto-confirmation via parameter 1.181. 0 = no manual confirmation possible 1 = rising shoulder at digital input 1 2 = rising shoulder at digital input 2 3 = rising shoulder at digital input 3 4 = rising shoulder at digital input 4 5 = membrane keyboard (acknowledgement button)			

1.181	Automatic reset		Unit: s	
Relationship to parameter: 1.180 1.182	Parameter manual: p. xy	Transfer status: 2	min: 0 max.:1000 000 def.: 0	Own value (**to be entered!**)
	In addition to the reset function (1.180), an automatic reset can be selected. 0 = no automatic confirmation > 0 = time for automatic reset of error in seconds			

1.182	Number of automatic resets		Unit:	
Relationship to parameter: 1.180 1.181	Parameter manual: p. xy	Transfer status: 2	min: 0 max.: 500 def.: 5	Own value (**to be entered!**)
	In addition to the automatic reset (1.181), it is possible to limit the maximum number of automatic resets here. 0 = no restriction on automatic confirmations			

	> 0 = maximum number of permitted automatic confirmations

5.3.2 Preset speed mode

This mode has to be selected in parameter 1.100,
see also the section on selecting the operating mode

2.050	**Preset speed mode**		Unit: integer		
Relationship to parameter: 1.100 2.051 to 2.057	Parameter manual: p. xy	Transfer status: 2	min:	0	Own value (**to be entered!**)
			max.:	3	
			def.:	2	
	Selection of the digital inputs used for the preset speeds 0 = Digital In 1 (preset speed 1) (2.051) 1 = Digital In 1, 2 (preset speeds 1 - 3) (2.051 to 2.053) 2 = Digital In 1, 2, 3 (preset speeds 1 - 7) (2.051 to 2.057) 3 = membrane keyboard (button 1 = fixed frequency 1 / button 2 = fixed frequency 2)				

2.051 to 2.057	**Preset speed**		Unit: Hz		
Relationship to parameter: 1.020 1.021 1.100 1.150 2.050	Parameter manual: p. xy	Transfer status: 2	min:	-400	Own value (**to be entered!**)
			max.:	+400	
			def.:	0	
	The frequencies that are to be output at the digital inputs 1 - 3 specified in parameter 2.050 depending on the switching patterns. See chapter 5.2.1 on preset speeds.				

5.3.3 Motorised potentiometer

This mode must be selected in parameter 1.130. This function can be used as a source of target values for frequency setting mode as well as for the PID process controller.

2.150	MOP digital Input		unit: integer	
Relationship to Parameter: 1.130 4.030 4.050	Parameter manual: p. xy	Transfer status: 2	min: 0 max.: 8 def.: 3	Own value (to be entered!)
	Selection of the source for increasing and reducing the target value 0 = Digital In 1 + / Digital In 2 - 1 = Digital In 1 + / Digital In 3 - 2 = Digital In 1 + / Digital In 4 - 3 = Digital In 2 + / Digital 3 - 4 = Digital In 2 + / Digital In 4 - 5 = Digital In 3 + / Digital In 4 - 6 = Analogue In 1 + / Analogue In 2 - (must be selected in parameter 4.030 / 4.050) 7 = reference from customer PLC 8 = membrane keyboard (button 1 - / button 2 +)			

2.151	MOP step range		Unit: %	
Relationship to parameter: 1.020 1.021	Parameter manual: p. xy	Transfer status: 2	min: 0 max.: 100 def.: 1	Own value (**to be entered!**)
	Increments at which the target value changes per keystroke.			

2.152	MOP step time		Unit: s	
Relationship to parameter:	Parameter manual: p. xy	Transfer status: 2	min: 0.02 max.: 1000 def.: 0.04	Own value (**to be entered!**)
	Indicates the time during which the target value is totalled with a permanent			

	signal.

2.153	MOP response time		Unit: s		
Relationship to parameter:	Parameter manual: p. xy	Transfer status: 2	min:	0.02	Own value (**to be entered!**)
			max.:	1000	
			def.:	0.3	
	Indicates the time for which the signal is considered permanent.				

2.154	MOP reference memory		Unit: integer		
Relationship to parameter:	Parameter manual: p. xy	Transfer status: 2	min:	0	Own value (**to be entered!**)
			max.:	1	
			def.:	0	
	Defines whether the target value of the motor potentiometer is retained even after power outage. 0 = disable 1 = enable				

5.3.4 PID process controller

This mode has to be selected in parameter 1.100,
the target value source has to be selected in parameter 1.130,
see also chapter 5.2.1, “Explanation of operating modes – preset speed”.

3.050	PID proportional gain		Unit:		
Relationship to parameter: 1.100 1.130	Parameter manual: p. xy	Transfer status: 2	min:	0	Own value (**to be entered!**)
			max.:	100	
			def.:	1	
	Proportional share of PID controller				

3.051	PID integral gain		Unit: 1/s		
Relationship to parameter:	Parameter manual:	Transfer status:	min:	0	Own value (**to be entered!**)
			max.:	100	

1.100 1.130	p. xy	2	def.: 1	
	Integral share of PID controller			

3.052	PID derivative gain		Unit: s	
Relationship to parameter: 1.100 1.130	Parameter manual: p. xy	Transfer status: 2	min: 0 max.: 100 def.: 0	Own value (**to be entered!**)
	Differential share of PID controller			

3.060	PID feedback		Unit: integer	
Relationship to parameter: 1.100 1.130 3.061	Parameter manual: p. xy	Transfer status: 2	min: 0 max.: 2 def.: 0	Own value (**to be entered!**)
	Selection of the input source from which the feedback for the PID process controller is imported: 0 = analogue input 1 1 = analogue input 2			

3.061	PID inverted		Unit: integer	
Relationship to parameter: 3.060	Parameter manual: p. xy	Transfer status: 2	min: 0 max.: 1 def.: 0	Own value (**to be entered!**)
	The source of the feedback (parameter 3.060) is inverted 0 = disable 1 = enable			

3.062 to 3.068	PID preset reference		Unit: %	
Relationship to parameter: 1.130 3.069	Parameter manual: p. xy	Transfer status: 2	min: 0 max.: 100 def.: 0	Own value (**to be entered!**)
	The PID preset reference depending on the switching patterns is to be issued at the digital inputs 1 – 3 specified in parameter 3.069 (has to be selected in parameter 1.130).			

3.069	PID preset reference mode		Unit: integer	
Relationship to parameter: 1.100 3.062 to 3.068	Parameter manual: p. xy	Transfer status: 2	min: 0 max.: 2 def.: 0	Own value (**to be entered!**)
	Selection of the digital inputs used for fixed frequencies 0 = Digital In 1 (PID preset reference 1) (3.062) 1 = Digital In 1, 2 (PID preset references 1 – 3) (3.062 to 3.064) 2 = Digital In 1, 2, 3 (PID preset references 1 – 7) (3.062 to 3.068)			

3.070	PID stand-by time		Unit: s	
Relationship to parameter: 1.020	Parameter manual: S. xy	Transfer status: 2	min: 0 max.: 10 000 def.: 0	Own value (**to be entered!**)
	If the drive control runs for the set time at the low speed (parameter 1.020), the motor is stopped (0 Hz), see also Chapter 5.2.1, “PID process control” 0 = disable > 0 = waiting time until stand-by function is enabled			

3.071	PID stand-by hysteresis		Unit: %	
Relationship to parameter: 3.060	Parameter manual: p. xy	Transfer status: 2	min: 0 max.: 50 def.: 0	Own value (**to be entered!**)
	Condition for waking up the PID controller from stand-by. Once the control difference exceeds the set value as %, the control begins again, see also “Control mode (parameter 1.100) – PID controller”.			

5.3.5 Analogue inputs

For analogue inputs 1 and 2 (AIx display AI1/AI2)

4.020/4.050	AIx reference type		Unit: integer	
Relationship to parameter:	Parameter manual: p. xy	Transfer status: 2	min: 1 max.: 2 def.: 1	Own value (**to be entered!**)
	Function of analogue inputs 1/2: 1 = voltage input 2 = current input			

4.021/4.051	AIx minimum input		Unit: %	
Relationship to parameter:	Parameter manual: p. xy	Transfer status: 2	min: 0 max.: 100 def.: 0	Own value (**to be entered!**)
	Specifies the minimum value of the analogue inputs as a percentage of the range. Example: 0…10 V or 0…20 mA = 0%…100% 2…10 V or 4…20 mA = 20%…100%			

4.022/4.052	AIx maximum input		Unit: %	
Relationship to parameter:	Parameter manual: p. xy	Transfer status: 2	min: 0 max.: 100 def.: 100	Own value (**to be entered!**)
	Specifies the maximum value of the analogue inputs as a percentage of the range. Example: 0…10 V or 0…20 mA = 0%…100% 2…10 V or 4…20 mA = 20%…100%			

4.023/4.053	AIx dead time		Unit: %	
Relationship to parameter:	Parameter manual:	Transfer status:	min: 0 max.: 100	Own value (**to be entered!**)

	p. xy	2	def.: 0	
	Dead time as percentage of the range of the analogue inputs.			

4.024/4.054	AIx filter time		Unit: s	
Relationship to parameter:	Parameter manual: p. xy	Transfer status: 2	min: 0.02 max.: 1.00 def.: 0	Own value (**to be entered!**)
	Filter time of analogue inputs in seconds.			

4.030/4.060	AIx function		Unit: integer	
Relationship to parameter:	Parameter manual: p. xy	Transfer status: 2	min: 0 max.: 1 def.: 0	Own value (**to be entered!**)
	Function of analogue inputs 1/2 0 = analogue input 1 = digital input			

4.033/4.063	AIx physical unit		Unit:	
Relationship to parameter: 4.034/4.064 4.035/4.065	Parameter manual: p. xy	Transfer status: 2	min: 0 max.: 10 def.: 0	Own value (**to be entered!**)
	Selection of different physical values to be displayed. 0 = % 1 = bar 2 = mbar 3 = psi 4 = Pa 5 = m^3/h 6 = l/min 7 = °C 8 = °F 9 = m 10 = mm			

4.034/4.064	AIx physical minimum		Unit:	
Relationship to parameter: 4.033/4.063 4.035/4.065	Parameter manual: p. xy	Transfer status: 2	min:-10 000 max.:+10 000 def.: 0	Own value (**to be entered!**)
	Selection of the lower limit of a physical value to be displayed.			

4.035/4.065	AIx physical maximum		Unit:	
Relationship to parameter: 4.033/4.063 4.034/4.064	Parameter manual: p. xy	Transfer status: 2	min:-10 000 max.:+10 000 def.: 100	Own value (**to be entered!**)
	Selection of the upper limit of a physical value to be displayed.			

5.3.6 Digital inputs

4.110 to 4.113	DIx inverted		Unit: integer	
Relationship to parameter:	Parameter manual: p. xy	Transfer status: 2	min: 0 max.: 1 def.: 0	Own value (**to be entered!**)
	This parameter can be used to invert the digital input. 0 = disable 1 = enable			

5.3.7 Analogue output

4.100	AO1 function		Unit: integer	
Relationship to parameter: 4.101 4.102	Parameter manual: p. xy	Transfer status: 2	min: 0 max.: 40 def.: 0	Own value (**to be entered!**)
	Selection of the process value that is output at the analogue output. The standardisation (4.101/4.102) has to be adapted, depending on the selected process value. 0 = not assigned / INVEOR soft PLC 1 = intermediate circuit voltage 2 = supply voltage 3 = motor voltage 4 = motor current 5 = frequency feedback 6 = speed measured externally by speed sensor (if available) 7 = current angle or position (if available) 8 = IGBT temperature 9 = internal temperature 10 = analogue input 1 11 = analogue input 2 12 = frequency reference 13 = motor power 14 = torque 15 = field bus 16 = PID reference (as of V3.60) 17 = PID actual value (as of V3.60)			

4.101	AO1 minimum output		Unit:	
Relationship to parameter: 4.100	Parameter manual: p. xy	Transfer status: 2	min: -10 000 max.: +10 000 def.: 0	Own value (**to be entered!**)
	Describes which area is to be broken down into the 0-10 V output voltage or the 0-20 mA output current.			

4.102	AO1 maximum output	Unit:

Relationship to parameter: 4.100	Parameter manual: p. xy	Transfer status: 2	min: -10 000 max.: +10 000 def.: 0	Own value (**to be entered!**)
	Describes which area is to be broken down into the 0-10 V output voltage or the 0-20 mA output current.			

5.3.8 Digital outputs

For digital outputs 1 and 2 (DOx display DO1/DO2)

4.150/4.170	**DOx function**		Unit: integer	
Relationship to parameter: 4.151/4.171 4.152/4.172	Parameter manual: p. xy	Transfer status: 2	min: 0 max.: 50 def.: 0	Own value (**to be entered!**)
	Selection of the process value to which the output should switch. 0 = not assigned / INVEOR soft PLC 1= DC bus voltage 2= line voltage 3= motor voltage 4= motor current 5= frequency feedback 6= – 7= – 8= IGBT temperature 9= internal temperature 10= error (NO) 11= inverted error (NC) 12= final release levels 13= digital input 1 14= digital input 2 15= digital input 3 16= digital input 4 17= ready for operation 18= ready 19= operation 20= ready for operation + ready 21= ready for operation + ready + operation 22= ready + operation 23 = motor power 24 = torque 25 = field bus 26 = analogue input 1 (as of V3.60) 27 = analogue input 2 (as of V3.60) 28 = PID reference (as of V3.60) 29 = PID actual value (as of V3.60) 50 = torque			

4.151/4.171	DOx on		Unit:	
Relationship to parameter: 4.150/4.170	Parameter manual: p. xy	Transfer status: 2	min: -10 000 max.:10 000 def.: 0	Own value (**to be entered!**)
	If the set process value exceeds the switch-on limit, the output is set to 1.			

4.152/4.172	DOx off		Unit:	
Relationship to parameter: 4.150/4.170	Parameter manual: p. xy	Transfer status: 2	min: -10 000 max.:10 000 def.: 0	Own value (**to be entered!**)
	If the set process parameter falls below the switch-on limit, the output is set to 0.			

5.3.9 Relay

For relays 1 and 2 (Rel.x – display Rel. 1/Rel. 2)

4.190/4.210	Rel.x function		Unit: integer	
Relationship to parameter: 4.191/4.211 4.192/4.212	Parameter manual: p. xy	Transfer status: 2	min: 0 max.: 50 def.: 0	Own value (**to be entered!**)
	Selection of the process value to which the output should switch. 0= not assigned / INVEOR Soft-PLC 1= DC bus voltage 2= line voltage 3= motor voltage 4= motor current 5= frequency feedback 6= – 7= – 8= IGBT temperature 9= internal temperature			

	10= error (NO) 11= inverted error (NC) 12= final release levels 13= digital input 1 14= digital input 2 15= digital input 3 16= digital input 4 17= ready for operation 18= ready 19= operation 20= ready for operation + ready 21= ready for operation + ready + operation 22= ready + operation 23 = motor power 24 = torque 25 = field bus 26 = analogue input 1 (as of V3.60) 27 = analogue input 2 (as of V3.60) 28 = PID reference (as of V3.60) 29 = PID actual value (as of V3.60) 50 = motor current limit active

4.191/4.211	**Rel.x on**		Unit:	
Relationship to parameter: 4.190/4.210	Parameter manual: p. xy	Transfer status: 2	min: -10 000 max.:10 000 def.: 0	Own value (**to be entered!**)
	If the set process value exceeds the switch-on limit, the output is set to 1.			

4.192/4.212	**Rel.x off**		Unit:	
Relationship to parameter: 4.190/4.210	Parameter manual: p. xy	Transfer status: 2	min: -10 000 max.:10 000 def.: 0	Own value (**to be entered!**)
	If the set process parameter falls below the switch-on limit, the output is set to 0.			

4.193/4.213	Rel.x on delay		Unit: s	
Relationship to parameter: 4.194/4.214	Parameter manual: p. xy	Transfer status: 2	min: 0 max.: 10 000 def.: 0	Own value (**to be entered!**)
	Specifies the length of the switch-on delay.			

4.194/4.214	Rel.x off delay		Unit: s	
Relationship to parameter: 4.193/4.213	Parameter manual: p. xy	Transfer status: 2	min: 0 max.: 10 000 def.: 0	Own value (**to be entered!**)
	Specifies the length of the switch-off delay.			

5.3.10 External fault

5.010/5.011	External fault 1/2		Unit: integer	
Relationship to parameter: 4.110 to 4.113	Parameter manual: p. xy	Transfer status: 2	min: 0 max.: 4 def.: 0	Own value (**to be entered!**)
	Selection of the source from which an external error can be reported. 0 = not assigned / INVEOR Soft-PLC 1 = digital input 1 2 = digital input 2 3 = digital input 3 4 = digital input 4 If the selected digital input has a high signal, the inverter switches to error no. 23/24 external fault 1/2. Parameters 4.110 to 4.113 DIx inverse can be used to invert the logic of the digital input.			

5.3.11 Motor current limit

This function limits the motor current to a parameterised maximum value after a parameterised current-time zone has been reached.

This motor current limit is monitored at application level and thereby limits with relatively low dynamics. This has to be taken into consideration when selecting this function.

The maximum value is determined using the “motor current limit as %” parameter (5.070). This is stated as a percentage and relates to the nominal motor current specified in the “motor current” type plate data (33.031).

The maximum current-time zone is calculated from the product of the “motor current limit in s” parameter (5.071) and the fixed overcurrent of 50% of the required motor current limit.

As soon as this current-time zone is exceeded, the motor current is restricted to the limit value by reducing the rotation speed. If the output current of the drive control exceeds the motor current (parameter 33.031) multiplied by the set limit as % (parameter 5.070) for the set time (parameter 5.071), the speed of the motor is reduced until the output current is below the set limit.
This reduction is undertaken by a PI controller that operates depending on the current difference.
The entire function can be deactivated by setting the “motor current limit as %” parameter (5.070) to zero.

5.070	**Motor current limit**		Unit: %	
Relationship to parameter: 5.071 33.031	Parameter manual: p. xy	Transfer status: 2	min: 0 max.: 250 def.: 0	Own value (**to be entered!**)
	0 = disable			

5.071	**Motor current limit**		Unit: s	
Relationship to parameter: 5.070 33.031	Parameter manual: p. xy	Transfer status: 2	min: 0 max.: 100 def.: 1	Own value (**to be entered!**)

5.075	Gearbox factor		Unit:		
Relationship to parameter: 33.034	Parameter manual: S. xy	Transfer status: 2	min:	0	Own value (**to be entered!**)
			max.:	1000	
			Def.:	1	
	A gearbox factor can be set here. The mechanical speed display can be adjusted using the gearbox factor.				

5.3.12 Stall detection

5.080	Stall detection		Unit: integer		
Relationship to parameter: 5.081	Parameter manual: p. xy	Transfer status: 2	min:	0	Own value (**to be entered!**)
			max.:	1	
			def.:	0	
	This parameter can be used to activate stall detection. 0 = disable 1 = enable				

5.081	Blocking time		Unit: s		
Relationship to parameter: 5.080	Parameter manual: p. xy	Transfer status: 2	min:	0	Own value (**to be entered!**)
			max.:	50	
			def.:	2	
	Indicates the time after which a blockage is detected.				

5.090	Parameter set change		Unit: integer		
Relationship to parameter:	Parameter manual: S. xy	Transfer status: 2	min:	0	Own value (**to be entered!**)
			max.:	7	
			Def.:	0	
	Selection of active data set. 0 = not assigned 1 = data set 1 active				

	2 = data set 2 active 3 = digital input 1 4 = digital input 2 5 = digital input 3 6 = digital input 4 7 = INVEOR soft PLC The 2nd data set is only displayed in the PC software when this parameter is <> 0. The values of the data set currently selected are always displayed in the MMI.

5.4 Performance parameters

5.4.1 Motor data

33.001	**Type of motor**		Unit: Integer		
Relationship to parameter: 34.010	Parameter manual: S. xy	Transfer status: 1	min:	1	Own value (**to be entered!**)
			max.:	2	
			def.:	1	
	Selecting the type of motor 1 = asynchronous motor 2 = synchronous motor The parameters are shown depending on the type of motor selected. The type of control (parameter 34.010) must also be selected.				

33.015	**R optimisation**		Unit: %		
Relationship to parameter:	Parameter manual: p. xy	Transfer status: 1	min:	0	Own value (**to be entered!**)
			max.:	200	
			def.:	100	
	If necessary, this parameter can be used to optimise the start-up behaviour.				

33.031	**Motor current**		Unit: A		
Relationship to parameter:	Parameter manual:	Transfer status:	min:	0	Own value (**to be entered!**)
			max.:	150	

5.070	p. xy	1	def.: 0	
	This is used to set the nominal motor current $I_{M,N}$ for either the star or triangle connection.			

33.032	Motor power		Unit: W	
Relationship to parameter:	Parameter manual: p. xy	Transfer status: 1	min: 0	Own value (**to be entered!**)
			max.: 55 000	
			def.: 0	
	A performance value [W] $P_{M,N}$ has to be set here that corresponds to the motor power.			

33.034	Motor speed		Unit: rpm	
Relationship to parameter: 34.120 5.075	Parameter manual: p. xy	Transfer status: 1	min: 0	Own value (**to be entered!**)
			max.:10 000	
			def.: 0	
	The value from the motor's type plate data has to be entered here for the nominal motor rotation speed $n_{M,N}$.			

33.035	Motor frequency		Unit: Hz	
Relationship to parameter:	Parameter manual: p. xy	Transfer status: 1	min: 40	Own value (**to be entered!**)
			max.: 100	
			def.: 0	
	This is where the nominal motor frequency $f_{M,N}$ is set.			

33.050	Stator resistance	Unit: Ohm

Relationship to parameter:	Parameter manual: p. xy	Transfer status: 1	min:	0	Own value (**to be entered!**)
			max.:	30	
			def.:	0.001	
	The stator resistance can be optimised here, if the automatically determined value (motor identification) is insufficient.				

33.105	Leakage inductance		Unit: H		
Relationship to parameter:	Parameter manual: p. xy	Transfer status: 1	min:	0	Own value (to be entered**!**)
			max.:	100	
			def.:	0	
	Only for asynchronous motors. Here the leakage inductance can be optimised if the automatically calculated value (of motor identification) isn't sufficient.				

33.110	Motor voltage		Unit: V		
Relationship to parameter:	Parameter manual: p. xy	Transfer status: 1	min:	0	Own value (**to be entered!**)
			max.:	680	
			def.:	0	
	Only for asynchronous motors. This is used to set the nominal motor voltage $U_{M,N}$ for either the star or triangle connection.				

33.111	Motor cos phi		Unit: 1		
Relationship to parameter:	Parameter manual: p. xy	Transfer status: 1	min:	0.5	Own value (**to be entered!**)
			max.:	1	
			def.:	0	
	Only for asynchronous motors. The value from the motor's type plate data has to be entered here for the power factor cos phi.				

33.200	Stator inductance		Unit: H	
Relationship to parameter:	Parameter manual: p. xy	Transfer status: 1	min: 0 max.: 100 def.: 0	Own value (**to be entered!**)
	For synchronous motors only. The stator inductance can be optimised here if the automatically determined value (motor identification) is insufficient.			

33.201	Nominal flux		Unit: mVs	
Relationship to parameter:	Parameter manual: p. xy	Transfer status: 1	min: 0 max.: 5000 def.: 0	Own value (**to be entered!**)
	For synchronous motors only. The nominal flux can be optimised here if the automatically determined value (motor identification) is insufficient.			

5.4.2 I^2T

33.010	I^2T fact. motor		Unit: %	
Relationship to parameter: 33.031 33.011	Parameter manual: p. xy	Transfer status: 2	min: 0 max.: 1000 def.: 100	Own value (**to be entered!**)
	The percentage current threshold (in relation to motor current 33.031) at the start of integration can be set here.			

33.011	I^2T time		Unit: s	
Relationship to parameter: 33.010	Parameter manual: p. xy	Transfer status: 2	min: 0 max.: 1200 def.: 25	Own value (**to be entered!**)
	Time after which the drive control switches off with I^2T.			

33.138	Holding current time		Unit: s	
Relationship to parameter: 33.010	Parameter manual: p. xy	Transfer status: 2	min: 0 max.: 128 000 def.: 2	Own value (**to be entered!**)
	Only for asynchronous motors. This is the time during which the drive is held at continuous current after the brake ramp has been completed.			

5.4.3 Switching frequency

The internal switching frequency (clocking frequency) can be changed in order to control the power element. A high setting reduces noise in the motor but increases EMC emissions and losses in the drive control.

34.030	Switching frequency		Unit: Hz	
Relationship to parameter:	Parameter manual: p. xy	Transfer status: 2	min: 1 max.: 4 def.: 2	Own value (**to be entered!**)
	Selection of the switching frequency for the inverter 1 = 16 kHz 2 = 8 kHz 4 = 4 kHz			

5.4.4 Controller data

34.010	Control method		Unit: integer	
Relationship to parameter: 33.001 34.011	Parameter manual: p. xy	Transfer status: 2	min: 100 max.: 201 def.: 100	Own value (**to be entered!**)
	Selection of the type of control.			

	100 = open-loop asynchronous motor 101 = closed-loop asynchronous motor 200 = open-loop synchronous motor 201 = closed-loop synchronous motor

34.011	**Type of encoder**		Unit: integer		
Relationship to parameter: 34.010 34.012 34.013	Parameter manual: p. xy	Transfer status: 2	min:	0	Own value (**to be entered!**)
			max.:	2	
			def.:	0	
	Selection of the type of sensor 0 = inactive 1 = TTL sensor 2 = HTL sensor ⚠ WARNING When selecting the HTL sensor, 24V is transmitted via the interface. If using a TTL sensor, this could result in damage to the sensor.				

34.012	**Encoder line count**		Unit: integer		
Relationship to parameter: 34.010 34.011 34.013	Parameter manual: p. xy	Transfer status: 2	min:	0	Own value (**to be entered!**)
			max.:	10 000	
			def.:	1024	
	Selection of the line count of the sensor used.				

34.013	Encoder offset		Unit: °	
Relationship to parameter: 34.010 34.011 34.012	Parameter manual: p. xy	Transfer status: 2	min: 0 max.: 360 def.: 0	Own value (**to be entered!**)
	An encoder offset for the sensor can be set here.			

34.021	Flying restart		Unit:	
Relationship to parameter:	Parameter manual: p. xy	Transfer status: 1	min: 0 max.: 1 def.: 1	Own value (**to be entered!**)
	This parameter is used to activate the capture function. 0 = disable 1 = enable			

34.090	Speed control K_p		Unit: mA/rad/s	
Relationship to parameter:	Parameter manual: p. xy	Transfer status: 2	min: 0 max.: 10 000 def.: 150	Own value (**to be entered!**)
	The control boost of the speed control can be optimised here, if the automatically determined results (of the motor identification) are insufficient.			

34.091	Speed control T_n		Unit: s	
Relationship to parameter:	Parameter manual: p. xy	Transfer status: 2	min: 0 max.: 10 def.: 4	Own value (**to be entered!**)
	The reset time of the speed control can be optimised here, if the automatically determined results (of the motor identification) are insufficient.			

34.110	Slip trimmer		Unit:	
Relationship to parameter:	Parameter manual:	Transfer status:	min: 0 max.: 1	Own value (**to be entered!**)

33.034	p. xy	2	def.: 1	
	Only for asynchronous motors. This parameter can be used to optimise or deactivate slippage compensation. 0 = disable (performance as on the grid) 1 = compensation for slippage.			

34.130	**Voltage control reserve**		Unit:	
Relationship to parameter:	Parameter manual: p. xy	Transfer status: 2	min: 0 max.: 2 def.: 0.95	Own value (**to be entered!**)
	Only for asynchronous motors. This parameter can be used to adjust voltage output.			

5.4.5 Quadratic characteristic

34.120	**Quadratic characteristic**		Unit: integer	
Relationship to parameter: 34.121	Parameter manual: p. xy	Transfer status: 2	min: 0 max.: 1 def.: 0	Own value (**to be entered!**)
	Only for asynchronous motors. The quadratic characteristic curve function can be activated here. 0 = disable 1 = enable			

34.121	**Flux compensation**		Unit: %	
Relationship to parameter: 34.120	Parameter manual: p. xy	Transfer status: 2	min: 0 max.: 100 def.: 50	Own value (**to be entered!**)
	Only for asynchronous motors. The percentage by which the flux is to be reduced can be set here. An overvoltage shutdown can occur if there are any major changes in			

	operation.

5.4.6 Synchronous motor controller data

34.225	Field weakening		Unit: integer	
Relationship to parameter:	Parameter manual: p. xy	Transfer status: 2	min: 0 max.: 1 Def.: 0	Own value (**to be entered!**)
	For synchronous motors only. 0 = disable, the motor cannot be run in the field weakening. 1 = enable, the motor can be placed in the field weakening until the inverter has reached its current limit or the maximum permissible electromotive force.			

34.226	Starting current		Unit: %	
Relationship to parameter: 34.227	Parameter manual: p. xy	Transfer status: 2	min: 5 max.: 1000 Def.: 25	Own value (**to be entered!**)
	For synchronous motors only. Here the current which was stamped in the motor before starting the control can be adjusted. As % of nominal motor current.			

34.227	Init time		Unit: s	
Relationship to parameter: 34.226	Parameter manual: p. xy	Transfer status: 2	min: 0 max.: 100 Def.: 0.25	Own value (**to be entered!**)
	For synchronous motors only. Here the time during which the start up current 34.226 is stamped can be set.			

34.228 – 34.230	Startup procedure		Unit: integer		
Relationship to parameter:	Parameter manual: p. xy	Transfer status: 2	min:	0	Own value (**to be entered!**)
			max.:	1	
			Def.:	0	
	For synchronous motors only. By changing the startup procedure to “Controlled”, higher starting torques can be achieved. 0 = regulated, the inverter switches directly to the controller after the stamping phase. 1 = controlled, after the stamping phase the rotation field is increased by the control with start ramp 34.229 up to start frequency 34.230, then switched to the controller.				

6 Error detection and troubleshooting

This chapter contains the following:

– A list of the LED flash codes for error recognition
– A description of error recognition using PC tools
– A list of errors and system errors
– Notes on error detection with the MMI

⚠ **WARNING**

Risk of injury and electric shock.

Non-observance of warnings may result in serious injury or damage.

- Repairs to the device may only be performed by the KOSTAL Service department.
- Damaged parts or components have to be replaced with parts from the appropriate list of spare parts.
- The frequency inverter has to be disconnected prior to opening, assembly or disassembly.

6.1 List of the LED flash codes for error recognition

When an error occurs, the LEDs on the drive control display a flashing code that allows the errors to be diagnosed.

The following table contains an overview.

Red LED	Green LED	State
☀	○	Boot loader active (flashing in turn)
○	☀	Ready for operation (activate En_HW for operation)
○	●	Operation
☀	●	Warning
●	○	Error
☀	☀	Identification of motor data
○	☀	Initialisation
☀	☀	Firmware update
☀	●	Bus error operation
☀	☀	Bus error ready for operation

Tab. 14: LED flash codes

Key

○	LED off	●	LED on
☀	LED flashing	☀	LED flashing quickly

6.2 List of errors and system errors

When an error occurs, the inverter is switched off; you can find the corresponding error numbers in the flash code table or the PC tool.

Error messages can only be confirmed once the error has been remedied.

Error messages can be confirmed as follows:
– digital input (programmable)
– via the MMI (manual operating unit)
– auto confirmation (parameter 1.181, page 38)
– switching the device off and on
– via field bus (CANOpen, Profibus DP, EtherCAD)

The following section contains a list of possible error messages.
Please contact the KOSTAL service department if you encounter errors that are not listed here.

No.	Error name	Description of fault	Possible cause/remedy
1	Undervoltage 24 V application	Supply voltage for the application is less than 15 V	Overload of the 24 V supply
2	Overvoltage 24 V application	Supply voltage for the application is greater than 31 V	Internal 24 V supply is not OK or external supply is not OK
6	Customer PLC version error	The version of the customer PLC doesn't match the device firmware.	Check the version numbers of the customer PLC and device firmware
8	Communication application<>power	Internal communication between the application plate and the power-conducting plate is not OK	EMC interference
10	Parameter distributor	The internal distribution of parameters during initialisation failed	Parameter set is incomplete
11	Time-out power	The power part does not respond	Operation with 24 V without mains feed-in

No.	Error name	Description of fault	Possible cause/remedy
13	Cable break at analogue in 1 (4–20 mA / 2–10 V)	Current or voltage is less than the lower limit of analogue input 1 (monitoring for this error is activated automatically by setting parameter 4.021 to 20)	Cable break, faulty external sensor
14	Cable break at analogue in 2 (4–20 mA / 2–10 V)	Current or voltage is less than the lower limit of analogue input 2 (monitoring for this error is activated automatically by setting parameter 4.021 to 20)	Cable break, faulty external sensor
15	Stall detection	The drive shaft of the motor is stalled. 5.080	Remove the blockage
18	Excess frequency inverter temperature application	Inner temperature too high	Insufficient cooling, low motor speed and high torque, clocking frequency too high
21	Bus time-out	No answer from bus sharing unit or MMI/PC	Check bus wiring
22	Confirmation error	The number of maximum automatic confirmations (1.182) was exceeded	Check error history and remedy error
23	External fault 1	The parameterised fault input is active. 5.010	Correct the external fault
24	External fault 2	The parameterised fault input is active. 5.011	Correct the external fault
25	Motor detection	Motor identification error	Check INVEOR/motor and PC/MMI/INVEOR connections / restart motor identification
32	Trip IGBT	Protection of the IGBT module against overcurrent has been triggered	Short circuit in the motor or motor feed line / controller settings
33	Overvoltage of intermediate circuit	The maximum intermediate circuit current has been exceeded	Feedback by motor in generating operation / mains voltage too high / faulty setting for rotation speed control Brake resistor not connected or defective / ramp times too short
34	Undervoltage of intermediate circuit	The minimum intermediate circuit current has not been reached	Mains voltage too low, mains connection defective / check wiring
35	Excess motor	Motor PTC has been triggered	Overload of the motor

No.	Error name	Description of fault	Possible cause/remedy
	temperature		(e.g. high torque at low motor speed) / ambient temperature too high
36	Power failure		A phase is missing / mains voltage has been disrupted
38	Excess IGBT module temperature	Excess IGBT module temperature	Insufficient cooling, low motor speed and high torque, clocking frequency too high
39	Overcurrent	Maximum output current of the converter exceeded	Insufficient cooling, low motor speed and high torque, clocking frequency too high / ramp times too low / brake not open
40	Excess frequency inverter temperature	Inside temperature too high	Insufficient cooling, low motor speed and high torque, clocking frequency too high permanent overload / reduce ambient temperature / check fan
42	I^2T motor safety shut-off	The internal I2T motor protection (can be parameterised) has been triggered	Long-term overload
43	Ground leak	Ground leak during a motor phase	Insulation error
45	Motor connection disrupted	No motor current in spite of control through frequency inverter	No motor connected
46	Motor parameters	Plausibility check for motor parameters failed	Parameter set not OK
47	Drive control parameters	Plausibility check for drive control parameters failed	Parameter set not OK Please check the parameters 33.001 and 34.010
48	Type plate data	No motor data entered.	Please enter the motor data according to the type plate
49	Power class restriction	Max. overload of the drive control exceeded for more than 60 sec.	Check application / reduce load / use larger drive control

Tab. 15: Error detection

7 Technical data

7.1 General data

7.1.1 General technical data for 400V devices

This chapter contains the technical data.

Size	MA				MB			MC		MD			
Rated motor power [kW] (4-pin asynchr. motor)	0.55	0.75	1.1	1.5	2.2	3	4	5.5	7.5	11	15	18.5	22
Ambient temperature [°C]	-25 (non condensing) to +50 (without derating) *												
Mains voltage [V]	3~ 400 -10% ... 480 +10%												
Mains frequency [Hz]	47 to 63												
Network configurations	TN/TT												
Line current [A]	1.4	1.9	2.6	3.3	4.6	6.2	7.9	10.8	14.8	23.3	28.3	33.3	39.9
Nominal current, eff. [I_N at 8kHz/400 V]	1.7	2.3	3.1	4.0	5.6	7.5	9.5	13.0	17.8	28.0	34.0	40.0	48.0
Min. brake resistance [Ω]	100				50			50		30			
Max. current, eff.	150% of the nominal current for 60 sec												130%
Switching frequency [kHz]	4, 8, 16, (factory setting 8)												
Rotating field frequency [Hz]	0 - 400												
Protective function	Undervoltage, overvoltage, I^2t restriction, short circuit, motor –inverter temperature, anti-tilt protection, stall protection												
Process control	PID controller, free configuration												
Dimensions [L x W x H] mm	233 x 153 x 120				270 x 189 x 140			307 x 223 x 181		414 x 294 x 232			
Weight including adapter plate [kg]	3.9				5.0			8.7		21.0			
Protection type [IPxy]	65									55			
EMC	approvals acc. to DIN EN 61800-3, class C2												

Tab. 16: Technical data (technical changes reserved)

* in terms of the UL 508C standard, please see chapter 9.4!

7.1.2 General technical data for 230V devices

Size	MA												
Rated motor power [kW] (4-pin asynchr. motor)	0.37	0.55	0.75	1.1									
Ambient temperature [°C]	-10 (non condensing) to +40 (50 with derating) *												
Mains voltage [V]	1~ 200 -10% ... 230 +10%												
Mains frequency [Hz]	47 to 63												
Network configurations	TN/TT												
Line current [A]	4.5	5.6	6.9	9.2									
Nominal current, eff. [I_N at 8kHz/400 V]	2.3	3.2	3.9	5.2									
Min. brake resistance [Ω]	50												
Max. current, eff.	of the nominal current for 60 sec												
Switching frequency [kHz]	4, 8, 16, (factory setting 8)												
Rotating field frequency [Hz]	0 - 400												
Protective function	Undervoltage, overvoltage, I^2t restriction, short circuit, motor –inverter temperature, anti-tilt protection, stall protection												
Process control	PID controller, free configuration												
Dimensions [L x W x H] mm	233 x 153 x 120												
Weight including adapter plate [kg]	3.9												
Protection type [IPxy]	65												
EMC	approvals acc. to DIN EN 61800-3, class C1												

Tab. 17: Technical data (technical changes reserved)

* in terms of the UL 508C standard, please see chapter 9.4!

Designation	Function
Digital inputs 1–4	- Switching level low < 5 V / high > 15 V - Imax (at 24 V) = 3 mA - Rin = 8.6 kOhm
Analogue inputs 1, 2	- In +/- 10 V or 0–20 mA - In 2–10 V or 4–20 mA

Designation	Function
	- Resolution 10 bits - Rin = 10 kOhm
Digital outputs 1, 2	- Short-circuit proof - Imax = 20 mA
Relays 1, 2	1 changeover contact (NO/NC) maximum switching power *: - at ohmic load (cos j□= 1): 5 A at ~230 V or = 30 V - under inductive load (cos j□= 0.4 and L/R = 7 ms): 2 A at ~230 V or = 30 V Maximum reaction time: 7 ms ± 0.5 ms Electric life: 100 000 switching cycles
Analogue output 1 (current)	- Short-circuit proof - Iout = 0.20 mA - burden = 500 ohm
Analogue output 1 (voltage)	- Short-circuit proof - Uout = 0..10 V - Imax = 10 mA
Power supply 24 V	- Auxiliary voltage U = 24V DC - short-circuit proof - Imax = 100 mA - external feeding of 24 V possible
Power supply 10 V	- Auxiliary voltage U = 10 V DC - short-circuit proof - Imax = 30 mA

Tab. 18: Specification of interfaces

* in terms of the UL 508C standard, the maximum allowed is 2 A!

7.2 Derating of output power

Drive controls of the INVEOR series have two integrated PTC resistors as standard which monitor both the heat sink temperature and the internal temperature. As soon as a permissible IGBT temperature of 95°C or a permissible internal temperature of 85°C is exceeded, the drive control shuts down.

With the exception of the 22kW controller (size D 130%), all INVEOR type drive controls are designed for an overload of 150% for 60sec (every 10min). Reductions in the ability to handle overload and/or its duration should be taken into account in the following circumstances:

– A clocking frequency permanently set too high >8kHz (load-dependent).

– A permanently increased heat sink temperature, caused by a blocked air flow or a thermal blockage (dirty cooling ribs).
– Depending on the type of assembly, permanently excessive ambient temperature.

The respective max. output values can be determined from the following characteristics curves.

7.2.1 Derating due to increased ambient temperature

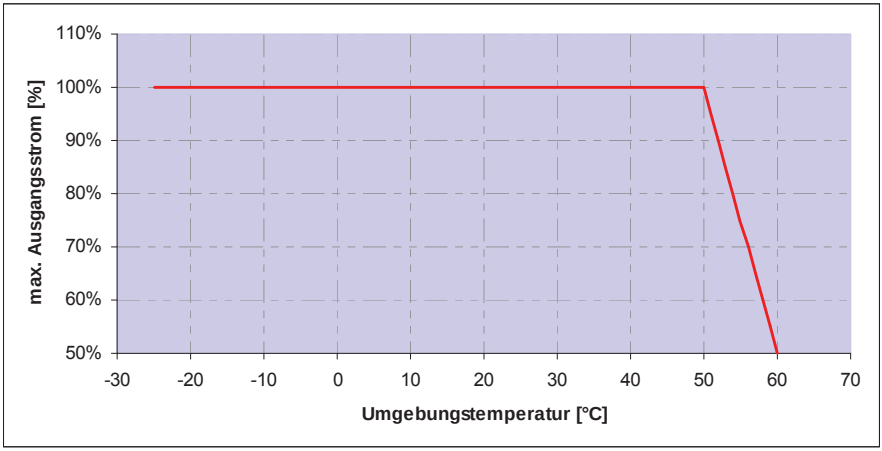

Fig. 26: Derating for drive control fitted on motor (all sizes)

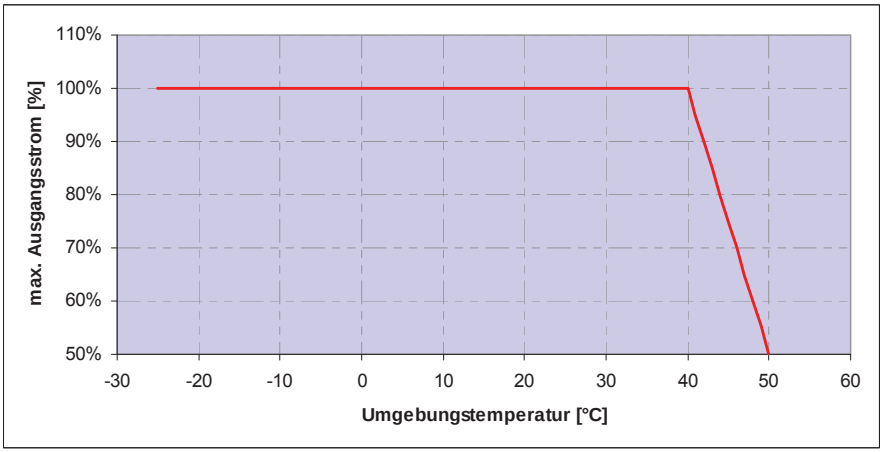

Fig. 27: Derating for drive control fitted on wall (sizes A - C)

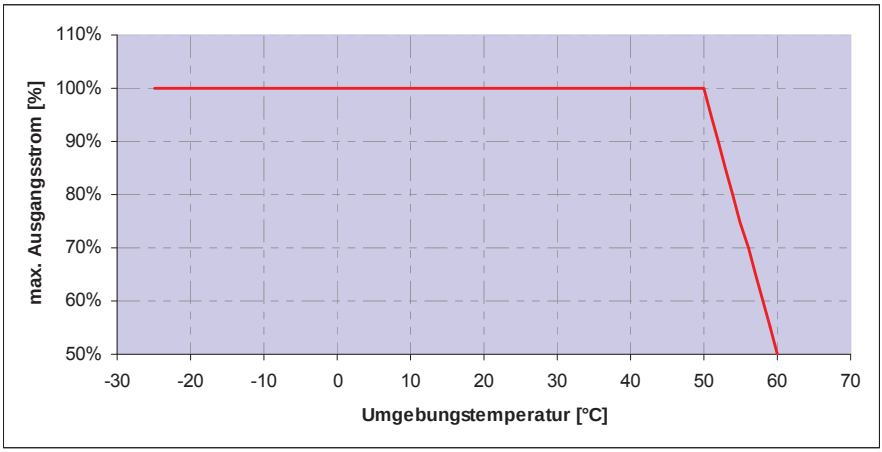

Fig. 28: Derating for drive control fitted on wall (size C with fan option and size D)

7.2.2 Derating due to installation altitude

The following applies to all INVEOR drive controls:

- No reduction in performance is needed in S1 mode up to 1000m above sea level
- A reduction in performance of 1% every 100m is needed from 1000m ≥ 2000m. Overvoltage category 3 is observed!
- Overvoltage category 2 should be observed from 2000m ≥ 4000m because of the lower air pressure!

In order to observe the overvoltage category:

- use external overvoltage protection in the INVEOR's mains feed.
- reduce the input voltage.

Please contact the KOSTAL Service department.

The respective max. output values can be determined from the following characteristics curves.

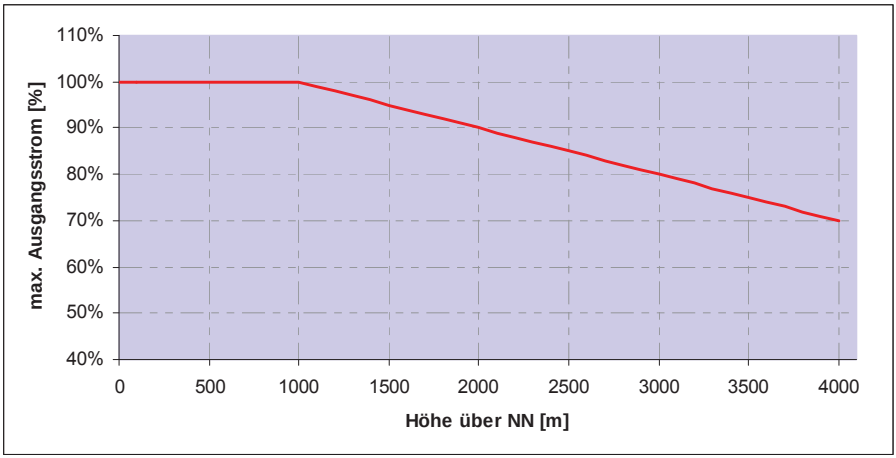

Fig. 29: Derating of maximum output current as a result of installation altitude

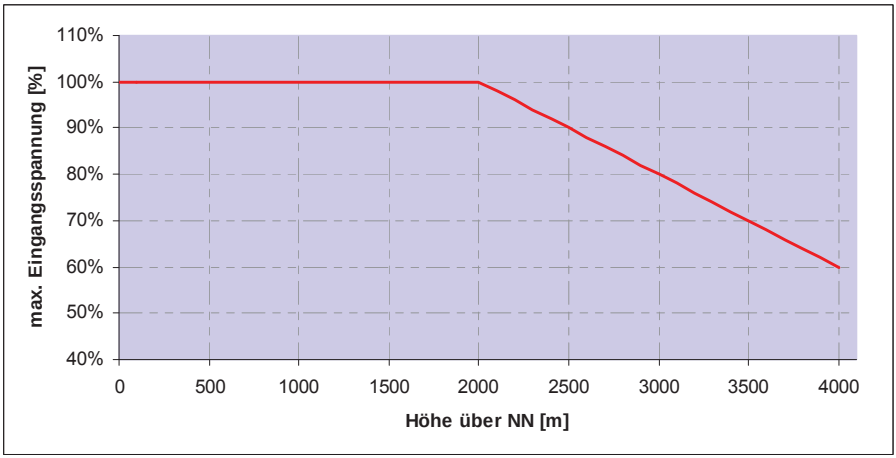

Fig. 30: Derating of maximum input voltage as a result of installation altitude

7.2.3 Derating due to clocking frequency

The following diagram shows the output current, depending on clocking frequency. To limit the thermal losses in the drive control, the output current must be reduced.

Note: The clocking frequency is not reduced automatically!

The max. output values can be determined from the following characteristics curve.

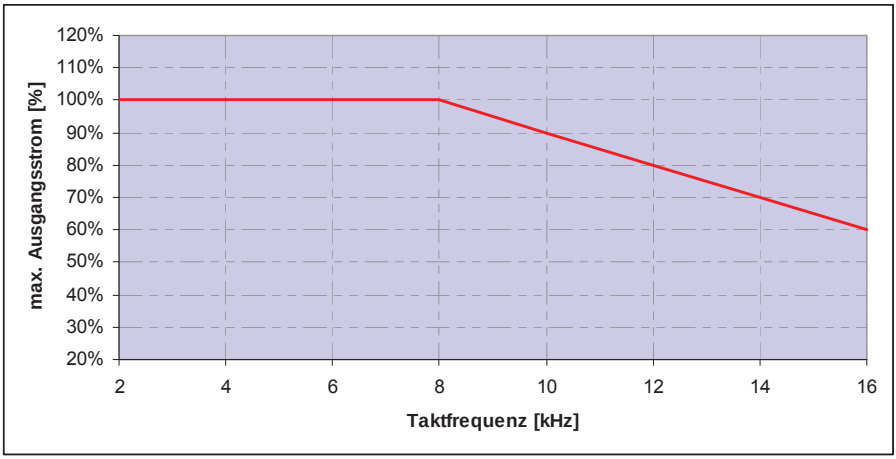

Fig. 31: Derating of maximum output current as a result of clocking frequency

8 Optional accessories

This chapter contains brief descriptions of the following optional accessories

– Adapter plates
– Manual control unit MMI including connection cable RJ11 on plug M12
– Brake resistors

8.1 Adapter plates

8.1.1 Motor adapter plates

A standard motor adapter plate (with an integrated terminal board for size A up to C) is available for each INVEOR size. Download the 3D files (.stp) for INVEOR and adapter plates from www.kostal.com/industrie.

INVEOR size	**A**	**B**	**C**	**D**
Power [kW]	0.55 to 1.5	2.2 to 4	5.5 to 7.5	11.0 to 22.0
Designation	ADP MA MOT 0000 A00 000 1	ADP MB MOT 0000 A00 000 1	ADP MC MOT 0000 A00 000 1	ADP MD MOT 0000 A00 000 1
Part no.	10023106	10026184	10025632	10098202

The customer needs to drill the four holes for mounting the standard adapter plate on the motor. Below are technical drawings showing the possible locations of the holes for each of the respective sizes.

NOTE!

The following applies to size D INVEOR drive controls:

An additional support is not necessarily needed in industrial use.

In the event of more stringent vibration requirements, it may be necessary for additional supports to be provided on the B side of the motor.

For help with project planning, please contact the KOSTAL Sales department.

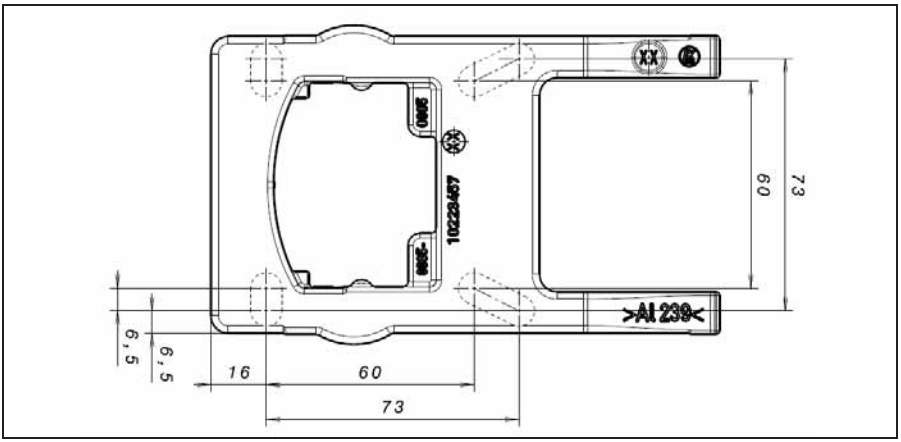

Fig. 32: Hole pattern for size A standard adapter plate

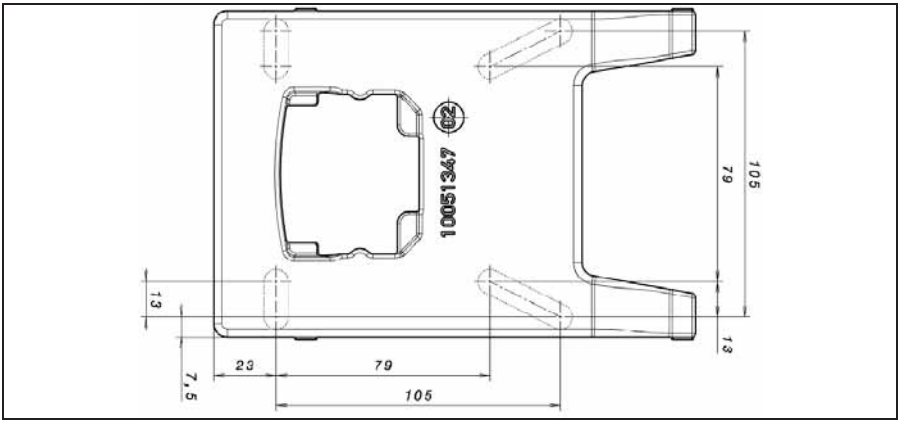

Fig. 33: Hole pattern for size B standard adapter plate

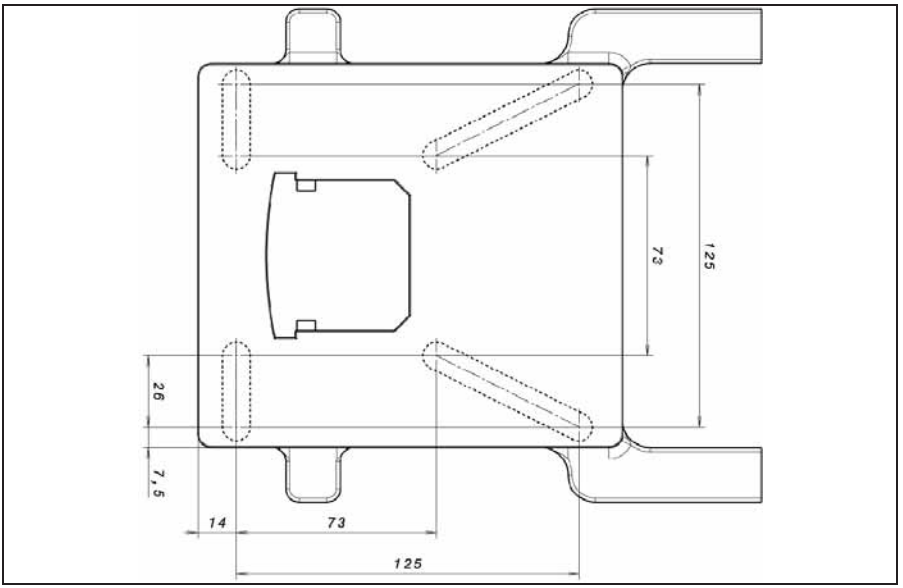

Fig. 34: Hole pattern for size C standard adapter plate

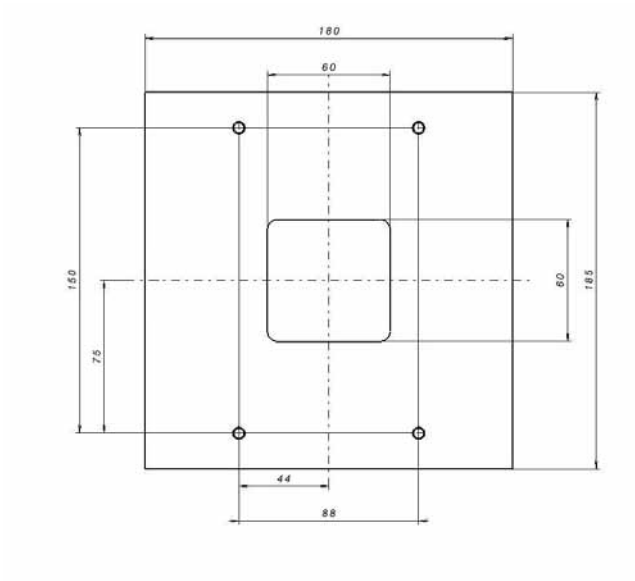

Fig. 35: Hole pattern for size D standard adapter plate

When using raised-cylindrical head screws (cf. DIN 912 / DIN 6912) or flat head screws (cf. DIN EN ISO 7380), the hole pattern must be drilled on the INVEOR mounting frame in compliance with the applicable drawing. The drill-hole centres should be on the respective centre lines of the slots illustrated on the diagram.

If the mounting frame is to be attached to a connection box that has no square hole pattern, then the drawing's diagonal centre lines are decisive.

If the mounting holes are outside the positions indicated, countersunk screws must be used to avoid fouling the attachment of the INVEOR.

If the existing flat seals are in a good condition, they should be reused.

8.1.2 Motor adapter plates (specific)

In addition to the standard motor adapter plates (with integrated terminal boards for sizes A to C)), there are also specific versions available for various motor suppliers (on request).

8.1.3 Wall adapter plates (standard)

A standard wall adapter plate (with an integrated terminal board for sizes A to C) is available for each INVEOR size. Download the 3D files for INVEOR and adapter plates from www.kostal.com/industrie. Four holes for mounting the adapter plate, as well as an EMC screw connection, are already present.

INVEOR size	A	B	C	D
Power [kW]	0.55 to 1.5	2.2 to 4	5.5 to 7.5	11.0 to 22.0
Designation	ADP MA WDM 0000 A00 000 1	ADP MB WDM 0000 A00 000 1	ADP MC WDM 0000 A00 000 1	ADP MD WDM 0000 A00 000 1
Part no.	10023107	10026185	10025932	10098170

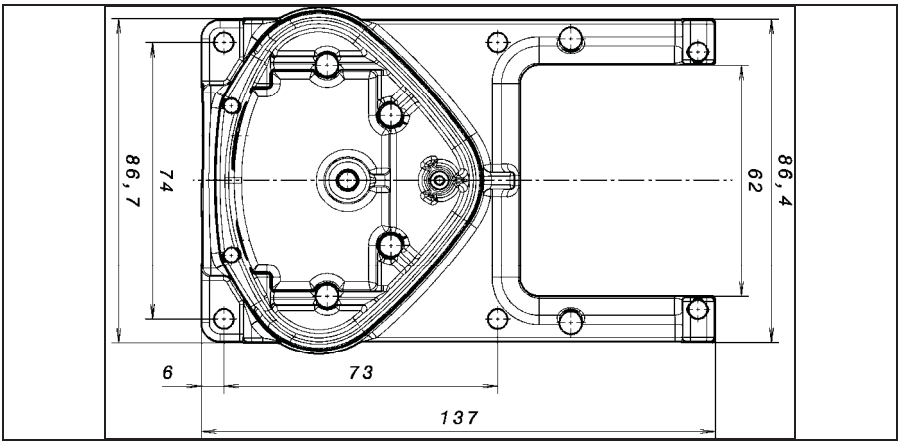

Fig. 36: Hole pattern for size A standard wall adapter plate

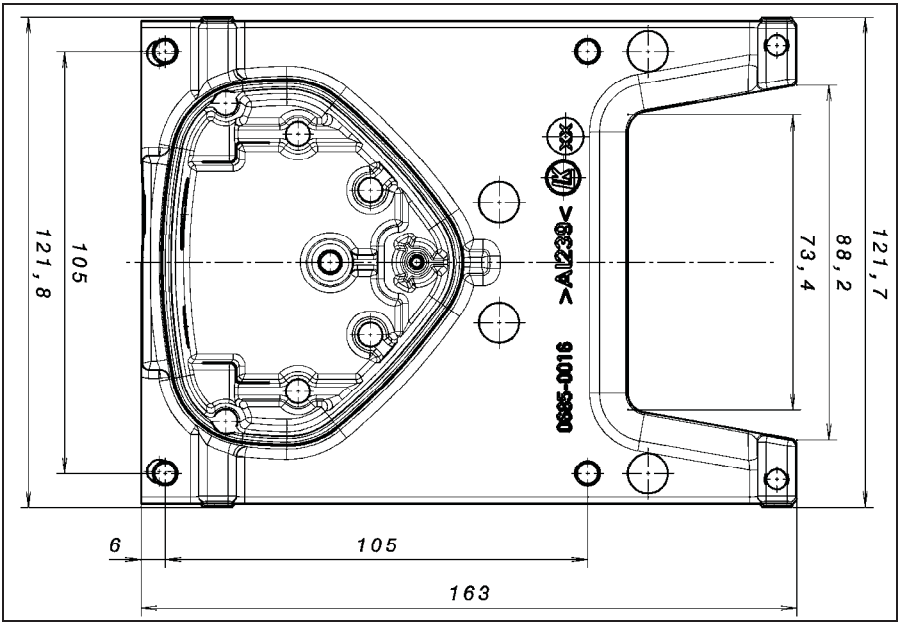

Fig. 37: Hole pattern for size B standard wall adapter plate

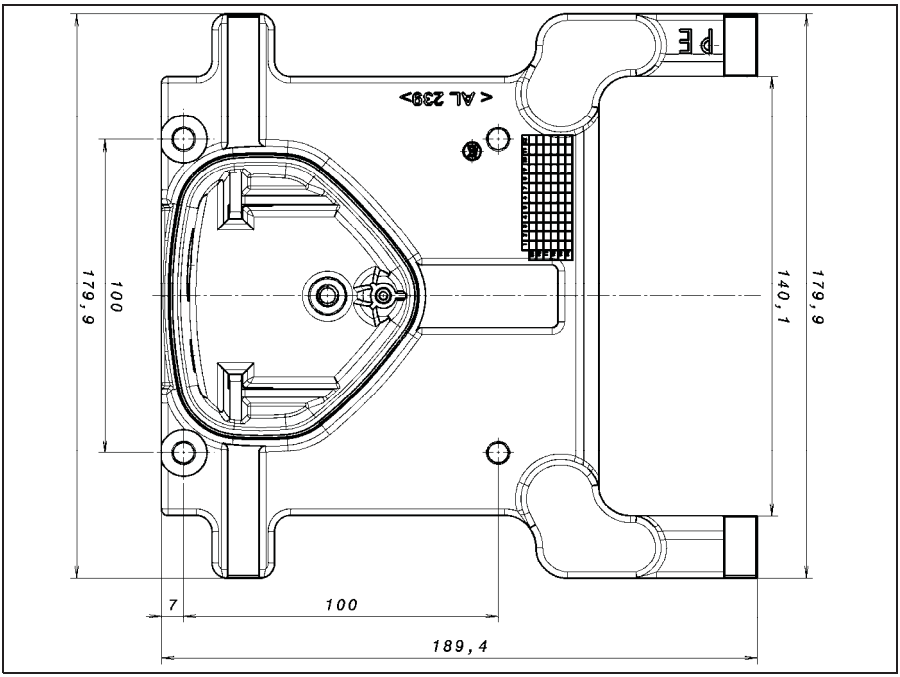

Fig. 38: Hole pattern for size C standard wall adapter plate

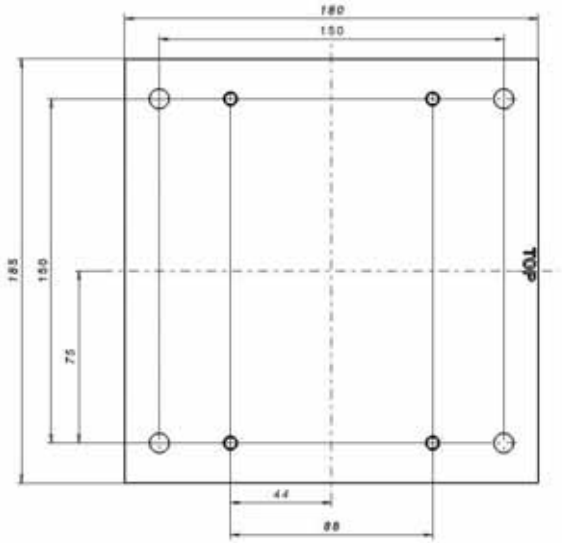

Fig. 39: Hole pattern for size D standard wall adapter plate

8.2 Membrane keyboard

As an option, the devices of the INVEOR family are also available as a variant with an integrated membrane keyboard. This keyboard can be used to operate the drive control locally.

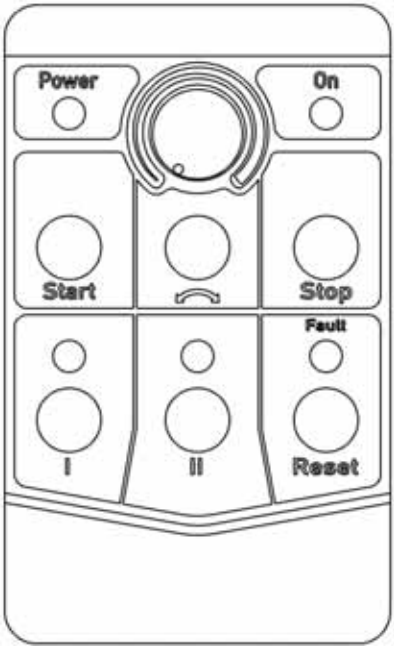

Fig. 40: Standard membrane keyboard

The following functionalities can be realised using the integrated membrane keyboard:

1. Nominal value specification: A nominal value (parameter 1.130) can be specified using the potentiometer integrated in the membrane keyboard (select internal potentiometer).
2. Nominal value approval: The start and stop buttons integrated in the membrane keyboard (select membrane keyboard) can be used to approve the drive software (parameter 1.131).
3. Direction of rotation V1: The direction of rotation (parameter 1.150) can be changed using the button integrated in the membrane keyboard (select membrane keyboard, direction of rotation button). The direction of rotation can only be changed when the motor is running.

   Direction of rotation V2: The direction of rotation (parameter 1.150) can be changed using buttons I and II integrated in the membrane keyboard (select membrane keyboard, button I clockwise/button II anti-clockwise via stop). The direction of rotation can only be changed when the motor is stationary. The integrated LEDs indicate the current direction of rotation.

Direction of rotation V3: The direction of rotation (parameter 1.150) can be changed using buttons I and II integrated in the membrane keyboard (select membrane keyboard, button I clockwise/button II anti-clockwise always). The direction of rotation can be changed when the motor is running and stationary. The integrated LEDs indicate the current direction of rotation.

4. Acknowledgement function: An error can be acknowledged (parameter 1.180) using the reset button integrated in the membrane keyboard (select membrane keyboard).
5. Motor potentiometer: A motor potentiometer (parameter 2.150) can be realised using the configurable buttons I and II integrated in the membrane keyboard (MOP digit.inp.). This function can be used to increase or decrease the nominal value. The integrated LEDs indicate when the minimum/maximum nominal value is reached.

   To activate this function, the nominal value specification (parameter 1.130) must be set to motor potentiometer!
6. Fixed frequency: Two fixed frequencies (parameter 2.050) can be realised using the configurable buttons I and II integrated in the membrane keyboard (MOP digit.inp.). This function can be used to increase or decrease the nominal value. The integrated LEDs indicate the nominal value currently selected.

The LEDs integrated in the membrane keyboard provide a general indication of the drive controls.

Power LED:	Lights up as soon as there is a voltage supply.
On LED:	Lights up during operation.
Fault LED:	Lights up when there is an error.
	Flashes as soon as an error can be acknowledged.

*To set parameters for these functions, you need PC software version 1.17 or higher.

8.3 MMI manual control unit including a 3 m RJ11 connection cable on an M12 plug

The MMI manual control unit (part no. 10004768) is a purely industrial product (accessory) which may only be used in conjunction with an INVEOR! It is connected to the integrated M12 interface of the INVEOR. This operating unit allows the user to write (program) and/or to visualise all the parameters of the INVEOR. Up to 8 complete data records can be stored in an MMI and copied to other INVEORs. As an alternative to the free INVEORpc software, complete commissioning is available, external signals are not needed.

8.4 PC communication cable USB on M12 plug (converter RS485/RS232 integrated)

As an alternative to the MMI manual control unit, an INVEOR can also be put into operation using the PC communication cable (part no. 10023950) and the INVEORpc software. The INVEORpc software is available free of charge from the KOSTAL homepage at www.kostal.com/industrie.

9 Guidelines, norms and standards

This chapter contains information about electromagnetic compatibility (EMC), and guidelines, norms and standards. For binding information about the relevant drive control approvals, please refer to the relevant type plate!

9.1 EMC limit classes

Please note that EMC limit classes are only reached if the standard switching frequency (clocking frequency) of 8 kHz is complied with. Depending on the installation material used and/or extreme ambient conditions, it might be necessary to use additional sheath wave filters (ferrite rings). If the device is mounted on the wall, the length of the shielded motor cables (with large surfaces on both sides) (max. 3 m) may not exceed the permitted limits.

Wiring suitable for EMC also requires that EMC screw connections be used on both sides (drive control and motor).

ATTENTION!

In a residential environment, this product can cause high-frequency disruptions that may require interference suppression measures.

9.2 Classification acc. to IEC/EN 61800-3

The generic standard defines test procedures and severity levels for every environment in the drive control category; these have to be complied with.

Definition of environment

First environment (residential, commercial and industrial area):

All “areas” that are directly supplied by a public low-voltage connection, such as:
- Residential area, e.g. houses, apartments etc.
- Retail area, e.g. shops, supermarkets
- Public institutions, e.g. theatres, stations
- Outside areas, e.g. petrol stations and parking areas
- Light industry, e.g. workshops, laboratories, small businesses

Second environment (industry):

Industrial surroundings with their own supply network that is separated from the public low-voltage supply by a transformer.

9.3 Standards and guidelines

The following specifically apply:

– Directive on Electromagnetic Compatibility
(Directive 2004/108/EC of the Council EN 61800-3:2004)

– Low Voltage Directive
(Directive 2006/95/EC of the Council EN 61800-5-1:2003)

– Product standards list

9.4 Required markings for UL

Required markings

For installation on industrial machines in accordance with the Standard for Industrial Machinery NFPA79 for recognised components, and NFPA70 for listed components, only. Please check the INVEOR name plate for further details.

Maximum ambient temperature:

Electronic	Adapter	Ambient
INV MA 2 0.37	ADP MA WDM	45°C
INV MA 2 0.55	ADP MA WDM	45°C
INV MA 2 0.75	ADP MA WDM	45°C
INV MA 2 1.1	ADP MA WDM	40°C
INV MA 4 1.5	ADP MA WDM	35°C
INV MB 4 2.2	ADP MB WDM	45°C
INV MB 4 3.0	ADP MB WDM	40°C
INV MB 4 4.0	ADP MB WDM	35°C
INV MC 4 5.5	ADP MC WDM	40°C
INV MC 4 7.5	ADP MC WDM	35°C

For listed parts (NFPA70):
Enclosure intended for use with field-installed conduit hubs, fittings or closure plates UL approved in accordance with UL514B and CSA certified in accordance with C22.2 No. 18, environmental type 1 or higher.

The INVEOR is for use in pollution level 2 only.

Internal overload protection operates within 60 seconds of reaching 150% of the motor full load current.

Suitable for use on a circuit capable of delivering no more than 5kA rms symmetrical amperes, 230 volts for INV Mx 2 or 480 volts for INV Mx 4, maximum when protected by fuses.

“Warning” – Use fuses rated 600V/10A for INV Mx 2 only.

“Warning” – Use fuses rated 600V/30A for INV MB 4 only.

“Warning” – Use fuses rated 600V/30A for INV MC 4 only.

Integral solid state short circuit protection does not provide branch circuit protection. Branch circuit protection must be provided in accordance with the manufacturer's instructions, national electrical code and any additional local codes.

All wiring terminals marked to indicate proper connections for the power supply, load and control circuitry.

The tightening, torque to connect the motor terminals, is 26 55 lb/in and 5.31 lb/in to connect the PTC.

For instructions for operator and servicing instructions on how to mount and connect the products using the intended motor connection adapter, please see sections 3.3 and 8.1.

Use 75°C copper wires only.

Connection of external motor over temperature sensing is required.

9.5 Quickstart guide

9.5.1 Quickstart guide for asynchronous motors

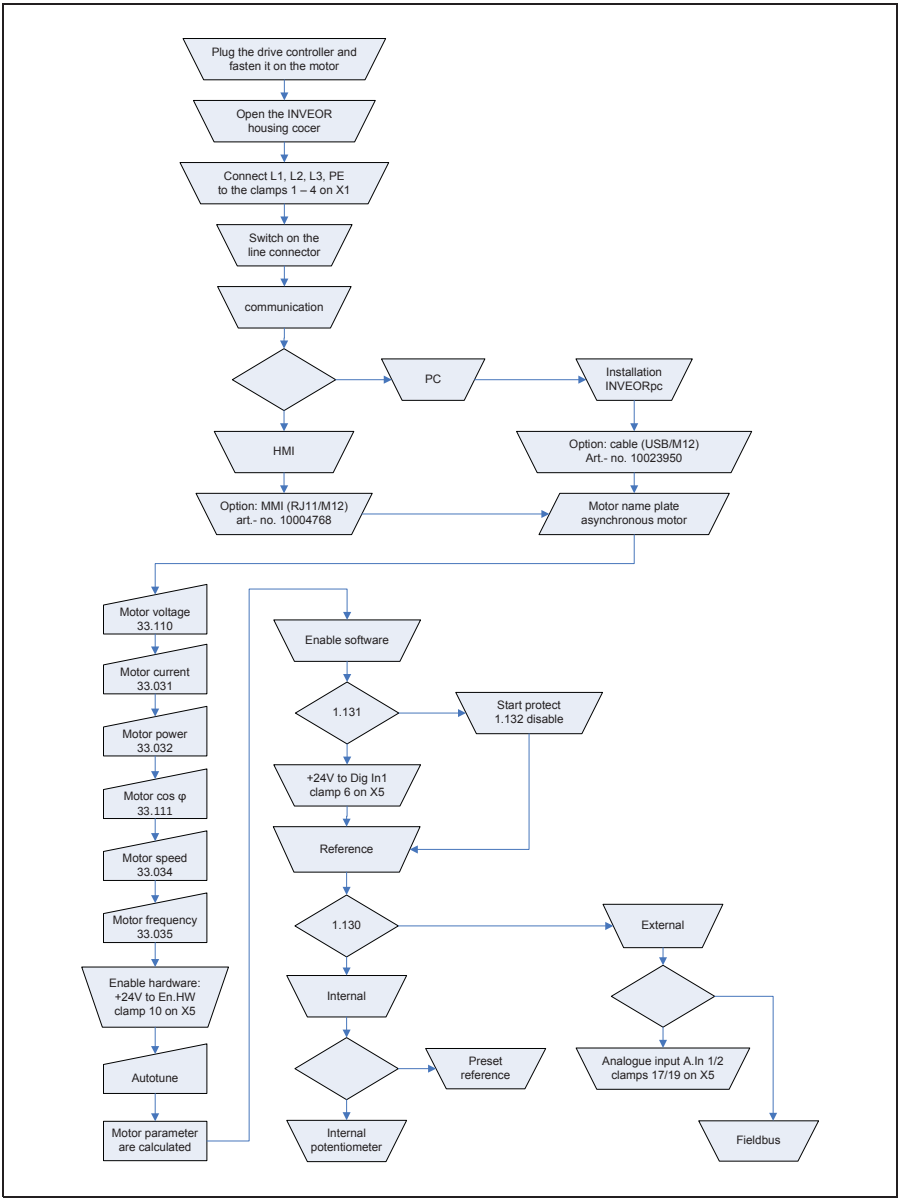

Fig. 41: Startup diagram for ASM

9.5.2 Quickstart guide for synchronous motors

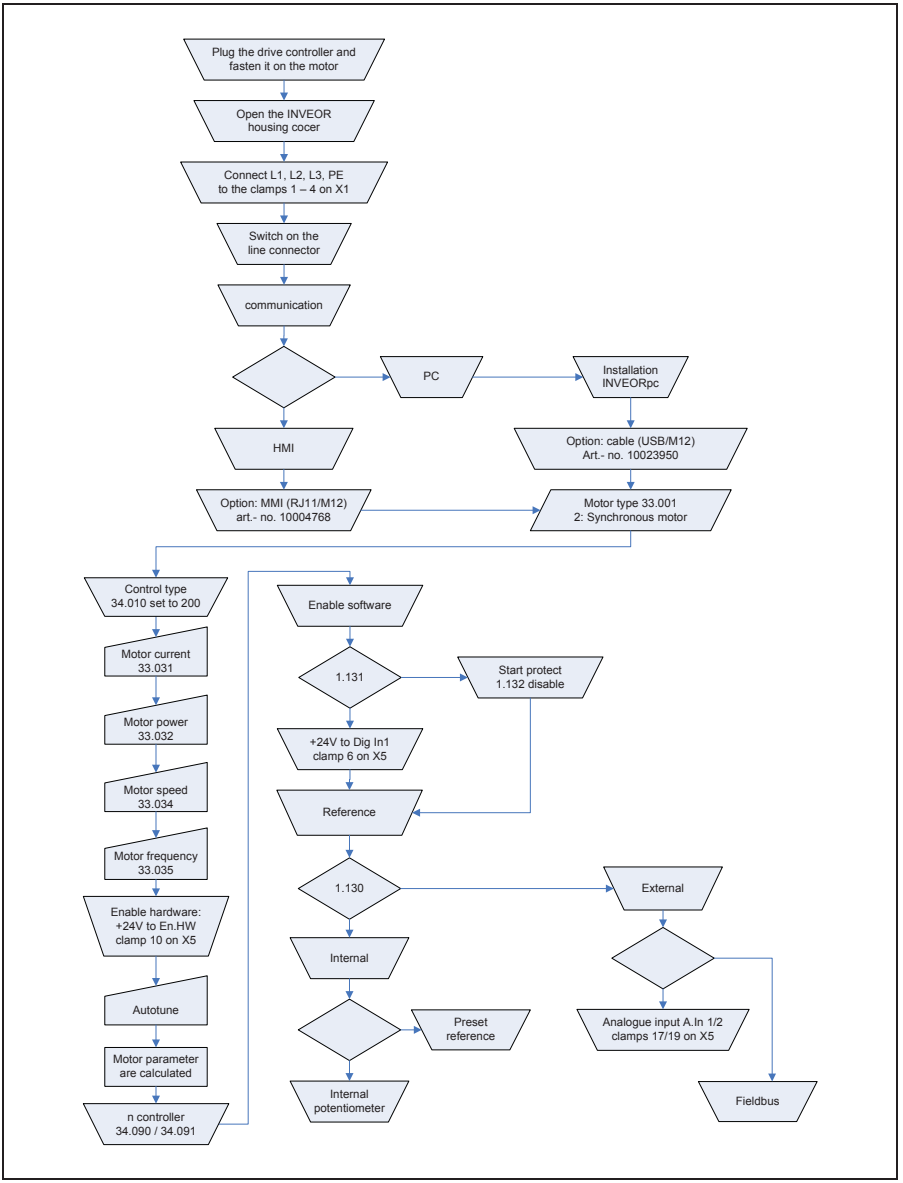

Fig. 42: Startup diagram for SM

10 List of key words

10205766

KOSTAL Industrie Elektrik GmbH
(KOSTAL Industrial Electronics)
Lange Eck 11
58099 Hagen
Germany
www.kostal.com/industrie

Phone: +49 2331 8040-4800
Fax: +49 2331 8040-4811

02.2013 – OM – EN